TECHNICAL/COST PROPOSAL

PROVIDE INHALATION TOXICITY STUDIES OF CLIENT'S PROPRIETARY PRODUCT BNW No. 20643

In Response to Letter Request

September 15, 1993

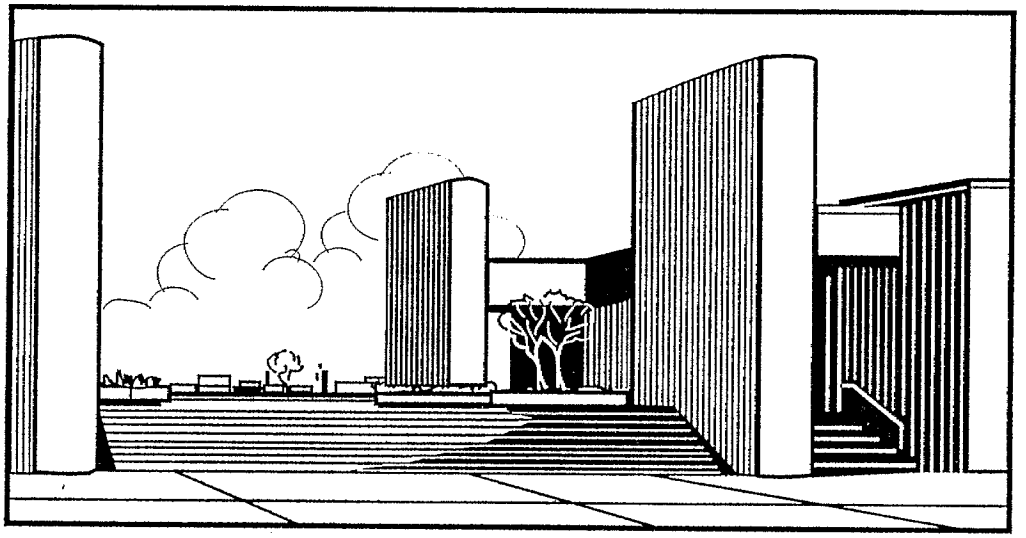

Battelle
. . . Putting Technology To Work

DISPOSAL SUSPENSION

2029227725

Source: https://www.industrydocuments.ucsf.edu/docs/hpxl0000

TECHNICAL/COST PROPOSAL

PROVIDE INHALATION TOXICITY STUDIES OF CLIENT'S PROPRIETARY PRODUCT BNW No. 20643

In Response to Letter Request

PHILIP MORRIS

September 15, 1993

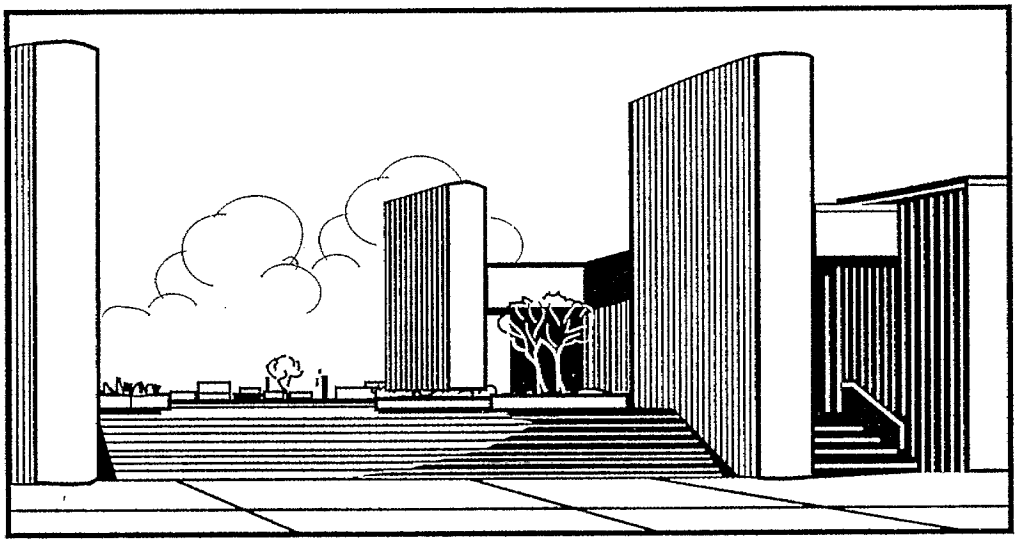

Battelle
. . . Putting Technology To Work

DISPOSAL SUSPENSION

2029227726

Source: https://www.industrydocuments.ucsf.edu/docs/hpxl0000

Battelle Memorial Institute is a major international, independent research and development institute. Founded more than half a century ago by Ohio industrialist Gordon Battelle, its objective is to improve the quality of life through the advancement and use of science.

Through sponsored programs, Battelle serves the research and development needs of industries and governments worldwide. Each year the laboratories undertake thousands of studies extending from fundamental research for new knowledge to applied programs directed toward developing new materials, products and processes.

Since opening its doors in Columbus, Ohio, in 1929 with a staff of 30 people, Battelle has grown to an organization with 8,200 research and support personnel and an annual research volume exceeding $610 million.

Major research centers are operated in Columbus, Ohio; Richland, Washington; Geneva, Switzerland; and Frankfurt, Germany. Other specialized facilities, offices and representatives are located throughout the world.

The Pacific Northwest Division includes the Battelle laboratories at Richland, the Seattle Research Center, and the Marine Sciences Laboratory at Sequim, Washington.

2029227227

Source: https://www.industrydocuments.ucsf.edu/docs/hpxl0000

TECHNICAL PROPOSAL

CARCINOGENICITY STUDY OF ROOM-AGED SIDESTREAM CIGARETTE SMOKE IN MICE

PROJECT NO. 20643

In Response to Letter Request

from

Philip Morris
Research Center
P.O. Box 26583
Richmond, VA 23261

September 1993

The information (data) contained in this Proposal or quotation constitutes a trade secret and/or information that is commercial or financial and confidential or privileged. It is furnished to Philip Morris in confidence with the understanding that it will not, without permission of the offeror, be used or disclosed for other than evaluation purposes; provided, however, that in the event a contract is awarded on the basis of this proposal or quotation, Philip Morris shall have the right to use and disclose this information (data) to the extent provided in the contract. This restriction does not limit Philip Morris right to use or disclose this information (data) if obtained from another source without restriction.

BATTELLE MEMORIAL INSTITUTE
PACIFIC NORTHWEST LABORATORIES
P.O. Box 999
Richland, Washington 99352

2029227728

"Use or disclosure of proposal data is subject to the restriction on the Title page of this Proposal."

Source: https://www.industrydocuments.ucsf.edu/docs/hpxl0000

TABLE OF CONTENTS

			Page
LIST OF FIGURES			
LIST OF TABLES			
LIST OF ABBREVIATIONS			
I.	INTRODUCTION		I-1
II.	TECHNICAL DISCUSSION		II-1
	A.	OBJECTIVES	II-1
		1. Generation and Monitoring Development Phase (Phase 1)	II-1
		a. Pilot Study	II-1
		b. Subchronic and Chronic Studies	II-1
		2. Animal Study and Evaluation Phase (Phase 2)	II-2
	B.	EXCEPTIONS AND AMPLIFICATIONS	II-4
		1. Costing	II-4
		2. Schedules	II-5
		3. Pilot Study to Select Mouse Strain	II-5
		4. Proposed Subchronic Study	II-6
		5. Diesel Engine Exhaust at 10 mg/m^3 TPM	II-6
		6. Number of Animals for Carcinogenicity Study	II-6
		7. Duration of the Carcinogenicity Study	II-6
		8. Clinical Observations	II-7
		9. Food Consumption	II-7
		10. Ophthalmoscopic Examinations	II-7
		11. Differential White Cell Count	II-7
		12. Anesthesia for Terminal Blood Collection and Euthanasia	II-8
		13. Disposition of Moribund Animals and Animals Unsuitable for Continued Exposure	II-8
		14. Histopathology	II-8
		a. Morphometry of Laryngeal Epithelia	II-8
		b. Histology of Lungs	II-8
		c. Evaluation of Goblet Cell Populations in Respiratory Tract	II-8
		15. Carboxyhemoglobin (COHb)	II-9
		16. Proposed Cell Proliferation Assays of Respiratory Tract Tissues in the Subchronic Study	II-9
		17. Proposed Protein/DNA Adducts Study in the Subchronic Study	II-9
		18. Proposed Enzyme Activity Assays in the Subchronic Study	II-9
		19. Proposed Studies to Evaluate the *In Vivo* Genotoxic Effects of RASS and Diesel Exhaust on Murine Lung Cells in the Subchronic Study	II-10

20292729

"Use or disclosure of proposal data is subject to the restriction on the Title page of this Proposal."

Source: https://www.industrydocuments.ucsf.edu/docs/hpxl0000

			Page
	20.	Proposed Big Blue™ Mouse Mutation Assay in the Subchronic Study	II-10
	21.	Lung Clearance and Lung Burden	II-10
III.	TECHNICAL APPROACH AND METHODS		III-1
A.	STATEMENT OF WORK		III-1
B.	STUDY DESIGN		III-1
1.	Exposure Group Assignments		III-1
a.	Pilot Study		III-1
b.	Subchronic Study		III-1
c.	Carcinogenicity Study		III-3
d.	Exposure Schedule		III-5
2.	Quarantine, Housing, and Sentinel Animals		III-5
a.	Quarantine Procedures		III-5
b.	Housing		III-6
c.	Feed		III-6
d.	Sentinel Animals		III-6
e.	Acclimatization to Exposure Units		III-6
f.	Randomization and Identification		III-7
g.	Nose-Only Exposure Unit		III-7
3.	Toxicology		III-7
a.	Observations		III-7
b.	Data Collection and Review		III-7
c.	Off-Hour Toxicology Supervision		III-8
4.	Respiratory Minute Volume		III-8
5.	Nicotine Metabolites in Urine		III-8
a.	Introduction		III-8
b.	Sampling		III-9
c.	Analytical Methodology		III-9
d.	Alternative Analytical Methodology Using Liquid Chromatography (LC)/Mass Spectrometry (MS)/MS		III-10
6.	Lung Clearance		III-10
a.	Introduction		III-10
b.	Study Design		III-11
c.	Experimental Methods		III-13
7.	Pathology		III-14
a.	Necropsy		III-14
b.	Trimming and Slide Preparation		III-16

2029227230

"Use or disclosure of proposal data is subject to the restriction on the Title page of this Proposal."

Source: https://www.industrydocuments.ucsf.edu/docs/hpxl0000

			Page
	c.	Special Considerations for Trimming Tissues	III-17
	d.	Histopathology	III-18
8.		Hematology	III-20
9.		Carboxyhemoglobin (COHb) Measurements	III-20
	a.	Sampling	III-21
	b.	Analytical Methodology	III-21
10.		Proposed Protein/DNA Adducts Study	III-22
11.		Proposed Enzyme Activity Assays	III-23
12.		Proposed Studies to Evaluate the *In Vivo* Genotoxic Effects of RASS and Diesel Exhaust on the Mouse Lung Cells	III-24
	a.	Proposed Micronuclei Study	III-24
	b.	Proposed Big Blue™ Mouse Mutation Assay	III-25
IV.		GENERATION AND MONITORING	IV-1
A.		TEST MATERIAL	IV-1
1.		Cigarettes	IV-1
	a.	Specification	IV-1
	b.	Procurement	IV-1
	c.	Analysis	IV-1
	d.	Storage and Inventory Control	IV-2
	e.	Disposal	IV-2
2.		Diesel Fuel	IV-2
	a.	Specification	IV-2
	b.	Procurement	IV-2
	c.	Analysis	IV-3
	d.	Storage and Inventory Control	IV-3
	e.	Disposal	IV-3
B.		EXPOSURE ATMOSPHERE GENERATION AND DELIVERY AND EXPOSURE SYSTEMS	IV-4
1.		Nose-Only Exposure Unit	IV-4
2.		System Layout	IV-4
3.		RASS Generation and Delivery System	IV-8
	a.	Introduction	IV-8
	b.	Smoking Machine	IV-8
	c.	Smoke-Aging Room	IV-8
	d.	Delivery System	II-11

2029227231

"Use or disclosure of proposal data is subject to the restriction on the Title page of this Proposal."

Source: https://www.industrydocuments.ucsf.edu/docs/hpxl0000

			Page
	4.	DEE Generation and Delivery System	IV-12
		a. Overview	IV-12
		b. Simulating the EPA *Urban Dynamometer Driving Schedule*	IV-12
		c. Engine Selection	IV-16
		d. Dynamometer System	IV-16
		e. Expected Concentrations of Engine Emissions--Particulates and Nitrogen Oxides (NO_x)	IV-16
		f. Control and Characterization of the DEE in the Exposure Units	IV-17
C.		CHARACTERIZATION AND CONTROL OF EXPOSURE SYSTEM	IV-17
	1.	Methods	IV-18
		a. Chemical Characterization of RASS and DEE Test Articles	IV-18
		b. Aerosol	IV-36
		c. Environmental	IV-38
	2.	Prestart Validation	IV-39
		a. Temporal Stability	IV-39
		b. Spatial Uniformity	IV-40
		c. Exposure Atmosphere Characterization	IV-40
D.		EXPOSURE DATA ACQUISITION AND CONTROL	IV-40
	1.	System Description	IV-40
	2.	Data Analysis	IV-40
	3.	System Documentation and Validation	IV-41
E.		INDUSTRIAL HYGIENE AND SAFETY	IV-41
V.		ANIMAL CARE PROCEDURES	V-1
A.		ANIMAL FACILITIES, PATHOGEN CONTROL PROCEDURES, AND ANIMAL CARE PERSONNEL	V-1
	1.	Animal Facilities and Equipment	V-1
	2.	Animal Care Procedures	V-3
		a. Preventing Introduction of Pathogens into the Facility	V-3
		b. Preventing Pathogens from Moving from One Room to Another in the Facility	V-3
		c. General Sanitation Procedures	V-4
	3.	Animal Care and Use Committee and Accreditation by the American Association for the Accreditation of Laboratory Animal Care (AAALAC)	V-4
VI.		GOOD LABORATORY PRACTICES COMPLIANCE	VI-1
A.		GOOD LABORATORY PRACTICES (GLP) IN THE TOXICOLOGY DEPARTMENT	VI-1

2029227732

"Use or disclosure of proposal data is subject to the restriction on the Title page of this Proposal."

Source: https://www.industrydocuments.ucsf.edu/docs/hpxl0000

			Page
	B.	GOOD LABORATORY PRACTICES FOR THE PROPOSED PROJECT	VI-1
		1. Personnel	VI-1
		2. Facilities	VI-1
		3. Quality Assurance Unit	VI-1
		a. Surveillances and Audits	VI-1
		b. Auditor Training	VI-2
		c. Quality Assurance Procedures	VI-2
		4. Standard Operating Procedures	VI-2
		5. FDA Inspections	VI-2
VII.		ORGANIZATION, EXPERIENCE, CAPABILITY AND MANAGEMENT PLAN	VII-1
	A.	BATTELLE, PACIFIC NORTHWEST LABORATORIES (BNW)	VII-1
	B.	TOXICOLOGY DEPARTMENT	VII-1
	C.	PERTINENT EXPERIENCE	VII-1
	D.	PROJECT MANAGEMENT PLAN	VII-5
	E.	RESPONSIBILITIES AND AUTHORITY OF THE PRINCIPAL INVESTIGATOR	VII-7
	F.	DAILY MONITORING OF THE STUDY EVENTS	VII-8
	G.	MONITORING PROJECT COSTS AND CONTRACT MODIFICATIONS	VII-8
	H.	MILESTONE SCHEDULES AND DELIVERABLES	VII-8
VIII.		QUALIFICATIONS OF PERSONNEL	VIII-1
	A.	KEY PERSONNEL	VIII-1
		1. Principal Investigator--E.W. Morgan	VIII-1
		2. Associate Principal Investigator--J.A. Dill	VIII-1
	B.	CRITICAL STAFF	VIII-2
		1. Toxicologists--B.J. Chou and T.J. Mast	VIII-2
		a. Dr. Billy J. Chou	VIII-2
		b. Dr. Terryl J. Mast	VIII-2
		2. Pathologists--R.A. Miller, S.L. Grumbein, R.A. Renne, and P.W. Mellick	VIII-3
		a. Dr. Rodney A. Miller	VIII-3
		b. Dr. Sondra L. Grumbein	VIII-3
		c. Dr. Roger A. Renne	VIII-4
		d. Dr. Paul W. Mellick	VIII-4
		3. Clinical Pathologist--H.A. Ragan	VIII-5
		4. Chemists--R.B. Westerberg, A.W. Gieschen, C.W. Wright, R.N. Lee, and S.D. Harvey	VIII-5
		a. Dr. R. Bruce Westerberg	VIII-5
		b. Andrew W. Gieschen	VIII-6

2029227233

"Use or disclosure of proposal data is subject to the restriction on the Title page of this Proposal."

Source: https://www.industrydocuments.ucsf.edu/docs/hpxl0000

			Page
	c.	Cherylyn W. Wright	VIII-6
	d.	Dr. Richard N. Lee	VIII-7
	e.	Dr. Scott D. Harvey	VIII-7
5.		Exposure Technology Personnel--J.R. Decker, B.J. Greenspan, H.S. DeFord, and N.E. Egilmez-Reynolds	VIII-7
	a.	Mr. John R. Decker	VIII-7
	b.	Dr. Bernard J. Greenspan	VIII-8
	c.	Mr. Henry S. DeFord	VIII-8
	d.	Dr. Nazli Egilmez-Reynolds	VIII-8
6.		Inhalation Technology	VIII-9
	a.	Inhalation Exposure Specialists	VIII-9
	b.	Engineering Specialists	VIII-9
	c.	Inhalation Exposure Technicians	VIII-10
7.		Laboratory Animal Medicine--S.E. Rowe	VIII-10
8.		Health and Safety Officer--J.Y. Young	VIII-11
9.		Quality Assurance Officers--R.A. Gelman and M.G. Horstman	VIII-11
	a.	R. Ann Gelman	VIII-11
	b.	Michael G. Horstman	VIII-12
C.		OTHER SENIOR PERSONNEL	VIII-12
1.		Dr. Richard P. Schneider	VIII-12
2.		Dr. David L. Springer	VIII-12
D.		ADDITIONAL PERSONNEL	VIII-12
1.		Clinical Pathology	VIII-12
	a.	Supervisor--C.O. Romsos	VIII-12
2.		Program Administration	VIII-13
	a.	Department Administrator--P.S. Ruemmler	VIII-13
3.		Toxicology	VIII-14
	a.	Lead Specialist--J.T. Pierce	VIII-14
4.		Xybion Path/Tox Computer Software	VIII-14
	a.	Assistant System Manager--J.C. Blessing	VIII-14
5.		Animal Resources	VIII-15
	a.	Supervisor--A.P. Wagner	VIII-15

2029227734

"Use or disclosure of proposal data is subject to the restriction on the Title page of this Proposal."

Source: https://www.industrydocuments.ucsf.edu/docs/hpxl0000

		Page
6.	Veterinary Services	VIII-16
a.	Veterinary Service Specialist–K.H. Debban	VIII-16
7.	Pathology	VIII-17
a.	Necropsy and Histology Supervisor–K.M. Gideon	VIII-17
8.	Chemistry	VIII-17
a.	Chemistry Specialists	VIII-17
b.	Chemistry Technicians	VIII-19
IX.	MILESTONE SCHEDULE	IX-1
X.	REFERENCES	X-1

APPENDICES

A. DRAFT PROTOCOLS

B. RESUMES

LIST OF FIGURES

		Page
IV-1	Diagram of the Modified Cannon Nose-Only Exposure Unit	IV-5
IV-2	Diagram of Paired Arrangement of Nose-Only Exposure Units	IV-6
IV-3	Portion of the Basement of the Life Sciences Laboratory-II Building Showing Room Layout of the Room-Aged Sidestream Cigarette Smoke (RASS) Generator and Aging Room, the Diesel Engine Exhaust (DEE) Generator, the Animal Exposure Rooms, and the Animal Housing Room	IV-7
IV-4	Schematic Diagram of the Sidestream Cigarette Smoke Generation System and Aging Room	IV-9
IV-5	Schematic Diagram of the Room-Aged Sidestream Cigarette Smoke Distribution and Exposure System	IV-10
IV-6	Schematic Diagram of the Diesel Engine Exhaust Generation System	IV-13
IV-7	Schematic Diagram of the Diesel Engine Exhaust Distribution and Exposure System	IV-14
IV-8	Graph of U.S. Environmental Protection Agency Urban Dynamometer Driving Schedule	IV-15
IV-9	Tobacco-Related Phenols and Catechols	IV-29
V-1	Life Sciences Laboratory-II Basement Floor Plan	V-2
VII-1	Organizational Structure of Battelle, Pacific Northwest Laboratories	VII-2
VII-2	Organizational Structure of the Life Sciences Center	VII-3
VII-3	Organizational Structure of the Toxicology Department	VII-4

2029227735

"Use or disclosure of proposal data is subject to the restriction on the Title page of this Proposal."

100 (PM Proposal)

Source: https://www.industrydocuments.ucsf.edu/docs/hpxl0000

		Page
VII-4	Organization Structure of the Philip Morris Project	VII-6
VII-5	Monthly Study Calendar	VII-9

LIST OF TABLES

		Page
IV-1	Composition of the 1R4F Reference Cigarette	IV-1
IV-2	Physical Data for the 1R4F Reference Cigarette	IV-2
IV-3	Conditions of Smoke Generation and Collection	IV-11
IV-4	Chemical-Specific Characterization of the Exposure Atmospheres	IV-18
IV-5	Flow-Injection Analysis Parameters for UV Particulate Matter	IV-20
IV-6	Aldehyde Concentrations in Room-Aged Sidestream Cigarette Smoke (RASS) and in Diesel Engine Exhaust (DEE)	IV-24
IV-7	High-Performance Liquid Chromatography Analysis Parameters for 2,4-Dinitrophenylhydrazine Derivitives of Aldehydes	IV-25
IV-8	Proposed High-Performance Liquid Chromatography Parameters for Solanesol Analysis	IV-26
IV-9	High-Performance Liquid Chromatography Parameters for Phenol and Catechol Analysis	IV-30
IV-10	Selected Analytes and Some Standard Reference Materials (SRMs) Containing Polycyclic Aromatic Hydrocarbons (PAHs) and Nitrated Polycyclic Aromatic Hydrocarbons (Nitro-PAHs)	IV-31
IV-11	Aerosol Properties of Environmental Tobacco Smoke	IV-37
IV-12	On-Line Monitoring Parameters	IV-42

2029227736

"Use or disclosure of proposal data is subject to the restriction on the Title page of this Proposal."

Source: https://www.industrydocuments.ucsf.edu/docs/hpxl0000

LIST OF ABBREVIATIONS

AAALAC	=	American Association for the Accreditation of Laboratory Animal Care
AALAS	=	American Association of Laboratory Animal Science
ABI	=	Applied Biosystems, Inc.
ACVP	=	American College of Veterinary Pathologists
AES	=	Atomic emission spectroscopy
ALS	=	Automatic liquid sample
APCI	=	Atmospheric pressure chemical ionization
ASCP	=	American Society of Clinical Pathologists
ASQC	=	American Society of Quality Control
ASTM	=	American Society for Testing and Materials
AU	=	Absorbance units
BCL	=	Battelle Columbus Laboratories
BNW	=	Battelle, Pacific Northwest Laboratories (Battelle-Northwest)
bp	=	Base pair
CBC	=	Complete blood count
CI	=	Chemical ionization
CO	=	Carbon monoxide
CO_2	=	Carbon dioxide
COHb	=	Carboxyhemoglobin
DBCP	=	Dibromodichloropropane
DC	=	Direct current
DEE	=	Diesel engine exhaust
DENA	=	N-Nitrosodiethylamine
DETBA	=	Diethylthiobarbituric acid
DMNA	=	N-Nitrosodimethylamine
DNP	=	Dinitropyrene
DNPH	=	2,4-Dinitrophenylhydrazine
DOE	=	U.S. Department of Energy
EAFS	=	Ethanol/acetic acid/formaldehyde/saline
EPA	=	U.S. Environmental Protection Agency
ES&H	=	Environmental, Safety, and Health
ETS	=	Environmental tobacco smoke
FDA	=	Food and Drug Administration
FTIR	=	Fourier transform infrared detection
GC	=	Gas chromatography
GDVII	=	Theiler's murine encephalomyelitis virus
GLP	=	Good Laboratory Practices
GSD	=	Geometric standard deviation
GST	=	Glutathione-S-transferase

2029227237

"Use or disclosure of proposal data is subject to the restriction on the Title page of this Proposal."

Source: https://www.industrydocuments.ucsf.edu/docs/hpxl0000

H&E	=	Hematoxylin and eosin
HBBS	=	Hank's balanced buffered salt
HC	=	Hydrocarbon
HEPA	=	High-efficiency particulate air
HNO_2	=	Nitrous acid
HNO_3	=	Nitric acid
hp	=	Horse power
HP	=	Hewlett-Packard
HPB	=	4-Hydroxy-1-(3-pyridyl)-1-butanone
HPLC	=	High-performance liquid chromatography
IANR	=	Individual Animal Necropsy Record
IARC	=	International Agency for Research on Cancer
ICP	=	Inductively coupled plasma
IND	=	Investigational New Drug
ISO	=	International Standards Organization
KSU	=	Kansas State University
LAIR	=	Letterman Army Institute of Research
LC	=	Liquid chromatography
LSL	=	Life Sciences Laboratory
MCH	=	Mean corpuscular hemoglobin
MCHC	=	Mean corpuscular hemoglobin concentration
MCV	=	Mean corpuscular volume
MHV	=	Mouse hepatitis virus
MMAD	=	Mass median aerodynamic diameter
MPE	=	Method performance evaluation
MS	=	Mass spectrometry
MSD	=	Mass selective detector
MVM	=	Minute virus of mice
Na_2CO_3	=	Sodium carbonate
NCI	=	National Cancer Institute
NDA	=	New Drug Approval
NIH	=	National Institutes of Health
NNK	=	4-(Methylnitrosamino)-1-(3-pyridyl)-1-butanone
NNN	=	N'-Nitrosonornicotine
NO	=	Nitric oxide
NO_2	=	Nitrogen dioxide
NO_x	=	Nitrogen oxides
NPYR	=	N-Nitorosopyrrolidine
NTP	=	National Toxicology Program
OECD	=	Organization for Economic Cooperation and Development
ORR	=	Operational Readiness Review
OSU	=	Oregon State University

2029227238

"Use or disclosure of proposal data is subject to the restriction on the Title page of this Proposal."

Source: https://www.industrydocuments.ucsf.edu/docs/hpxl0000

PAC	=	Polynuclear aromatic compound
PAH	=	Polycyclic aromatic hydrocarbon
PAI	=	Pathology Associates, Inc.
PCB	=	Polychlorinated biphenyls
PCNA	=	Proliferating cell nuclear antigen
PI	=	Principal Investigator
PM	=	Particulate matter
PNL	=	Pacific Northwest Laboratory
PTFE	=	Polytetrafluoroethylene
PVM	=	Pneumonia virus of mice
QA	=	Quality Assurance
QAU	=	Quality Assurance Unit
RAM	=	Real-time aerosol monitors
RASS	=	Room-aged sidestream cigarette smoke
RBC	=	Red blood cells
RH	=	Relative humidity
rpm	=	Revolutions per minute
RSD	=	Relative standard deviation
RT	=	Retention time
SD	=	Standard deviation
SMVCE	=	Sperm morphology and vaginal cytology evaluation
SO_2	=	Sulfur dioxide
SOP	=	Standard operating procedure
SRM	=	Standard reference materials
TEA	=	Thermal energy analyzer
TEOM	=	Tapered element oscillating microbalance
THC	=	Total hydrocarbons
Ti	=	Titanium
TiO_2	=	Titanium dioxide
TLV	=	Threshold limit value
TPM	=	Total particulate matter
UC	=	University of California
UL	=	Underwriters' Laboratory
UV	=	Ultraviolet
VPRC	=	Volume of packed red cells
WBC	=	White blood cells
XRF	=	X-ray fluorescence
1-NP	=	1-nitropyrene
2-NF	=	2-nitrofluorene

2029227739

"Use or disclosure of proposal data is subject to the restriction on the Title page of this Proposal."

Source: https://www.industrydocuments.ucsf.edu/docs/hpxl0000

Source: https://www.industrydocuments.ucsf.edu/docs/hpxl0000

I. INTRODUCTION

Battelle, Pacific Northwest Laboratories (Battelle-Northwest; BNW) is pleased to submit this proposal in response to letter inquiries (October 20 and November 19, 1992) and subsequent technical discussions with Philip Morris (the Sponsor) regarding studies of the long-term inhalation effects of room-aged side-stream cigarette smoke (RASS) on the mouse respiratory tract. The RASS is used as an experimental model for environmental tobacco smoke (ETS) at concentrations of 0, 1, 3, or 10 mg total particulates per cubic meter. These exposure concentrations were carefully chosen with respect to real-life environments. In extreme conditions, the particulate concentration in a smoke-filled billiard parlor has been recorded at 0.8 mg/m^3 (Guerin et al., 1992). The high exposure concentration in this study will exceed the extreme human exposure to ETS by a factor of ~10. A diesel engine exhaust (DEE)-exposed group will be included as a positive control.

Arrangement of the technical portion of this proposal was based on our understanding of the Sponsor's desire to divide the proposal into several parts, to include:

1. A chronic, nose-only inhalation study of RASS or DEE as outlined in the sample protocol provided by the Sponsor, which includes construction and testing of the exposure and monitoring systems, and measurment of all parameters indicated in the sample protocol. Non-neoplastic and neoplastic lesions particularly in the respiratory tract will be of major interest. Animal systemic effects (e.g., changes in body and organ weights, signs of intoxication) will also be determined. Effects will be compared with those seen in the filtered-air-exposed negative and DEE-exposed positive control groups. Biomonitoring will be performed on RASS- and DEE-exposed mice.

2. A 13-week pilot study of three different strains of mice, to expose mice to room air in nose-only exposure apparatus on the same daily schedule required for the chronic study. The purpose of this study is to determine the relative ability of several strains of mice to adapt to the handling and confinement procedures required for a chronic, nose-only inhalation study.

3. A subchronic, nose-only inhalation study of RASS (two concentrations) and DEE (two concentrations). This study will utilize one strain of mice, selected by the Sponsor and BNW on the basis of the data from the pilot study (item 2 above), and other available information. This study will allow BNW to work out any technical difficulties, establish laboratory procedures, and assure the appropriate exposure concentrations selected for the carcinogenicity study.

4. Additional or substitute studies designed to examine parameters required in the Sponsor's sample protocol, and/or other studies designed to detect health effects related to inhalation of the RASS and DEE. These studies will be performed during the subchronic, nose-only study (item 3 above); selected studies will then be chosen by the Sponsor and BNW to be performed in association with the chronic study.

The general conduct of the study will comply with the Organization for Economic Cooperation and Development (OECD) Guideline 451, the National Toxicology Program (NTP) *Specifications for the Conduct of Studies to Evaluate the Toxic and Carcinogenic Potential of Chemicals in Laboratory Animals* and Good Laboratory Practices (GLP) regulations (40 CFR 792).

BNW currently has numerous contracts with NTP to conduct toxicity, carcinogenicity, and toxicokinetic studies. During the last 15 years, more than 40 chemicals have been evaluated by the inhalation route. In this project, BNW proposes to use a team of highly dedicated professional and technical staff

"Use or disclosure of proposal data is subject to the restriction on the Title page of this Proposal."

2029227741

Source: https://www.industrydocuments.ucsf.edu/docs/hpxl0000

whose training and experience are well suited for the proposed study. This team will be led by Dr. Earl W. Morgan, Principal Investigator, a board-certified toxicologist with more than 10 years of experience in the management of toxicity and carcinogenicity studies.

In recognition of the importance of test article generation and monitoring, an Associate Principal Investigator, Dr. Jeffrey A. Dill, is also proposed to coordinate the assignments of the exposure system, exposure generation, and chemical analysis and monitoring. Dr. Dill is an analytical chemist with 7 years of experience on NTP-type inhalation studies.

2029227742

"Use or disclosure of proposal data is subject to the restriction on the Title page of this Proposal."

Source: https://www.industrydocuments.ucsf.edu/docs/hpxl0000

2029227743

Source: https://www.industrydocuments.ucsf.edu/docs/hpxl0000

II. TECHNICAL DISCUSSION

A. OBJECTIVES

Based on correspondence and discussions with the Sponsor, the following is our perception of the objectives of the proposed studies.

1. Generation and Monitoring Development Phase (Phase 1)

The objective of Phase 1 is to demonstrate that BNW is capable of developing the RASS and DEE generation and delivery systems, the animal exposure systems, the on-line aerosol and chemical monitoring and concentration control systems, and the chemical characterization systems for exposing mice to the test articles. During Phase 1, BNW will also demonstrate that the test articles will behave consistently at the desired concentrations under the specified conditions for 6 hours plus T_{90} (the time for the concentration to build to 90% of the target concentration) for 3 consecutive days. Specific tasks to accomplished during the development phase are listed below:

a. Pilot Study. During the early part of Phase 1, a pilot study using three strains of mice (C57Bl/6, B6C3F1, and CD-1) will be conducted to determine:

- Whether mice can adapt to the nose-only exposure apparatus for 6 hours/day, 5 days/week for 13 weeks
- The best strain to use for the study
- Modifications or improvements needed to the exposure system or animal handling procedure to maximize the chance of successfully conducting these studies.

b. Subchronic and Chronic Studies. During prestart efforts for the subchronic and chronic studies, BNW will:

- Develop methods of generating and monitoring RASS aerosol at 1 and 10 mg/m^3 and DEE at 3 and 10 mg/m^3
- Demonstrate the sensitivity, specificity, precision, linearity and limits of detection and quantification of the on-line aerosol and chemical concentration monitoring systems to monitor exposure units and exposure room air
- Demonstrate the sensitivity, specificity, precision, linearity, and limits of detection and quantification of the RASS and DEE chemical characterization systems
- Determine time to attain 90% of target concentration (T_{90}) following start of exposure and time to decay to 10% of the target concentration (T_{10}) following end of exposure
- Demonstrate homogeneity of concentration and particle size distribution in the nose-only exposure units
- Develop and test facility exhaust monitoring methods under actual animal exposure conditions
- Demonstrate the containment of the RASS and DEE test articles in the exposure units while simulating actual animal exposures.

2029227744

"Use or disclosure of proposal data is subject to the restriction on the Title page of this Proposal."

Source: https://www.industrydocuments.ucsf.edu/docs/hpxl0000

During the development phase for the generation and monitoring systems, all activities will be conducted in compliance with the U.S. Environmental Protection Agency (EPA) GLP Toxic Substances Control Act regulations 40 CFR 792. A Phase 1 Progress Report will be submitted to the Sponsor for evaluation before the start of the subchronic and chronic studies. These reports will not be delayed for detailed quality assurance (QA) auditing, however, they will present trackable data with evidence of quality control. These reports will be reviewed by BNW's QA Unit before submission of the final report.

2. Animal Study and Evaluation Phase (Phase 2)

Specific accomplishments to be achieved during Phase 2 will include conducting a 13-week subchronic study and a carcinogenicity study. The subchronic study will be conducted to evaluate effects of inhalation exposure to RASS at 1 or 10 mg/m^3 total particulate matter (TPM) and to DEE at 3 or 10 mg/m^3. During the subchronic study, some special studies proposed by BNW, as well as the parameters outlined in the Sponsor's sample carcinogenicity protocol, will be measured. The carcinogenicity study will be conducted to determine the potential for the development of neoplastic lesions during or after a life-long exposure to RASS at 1, 3, or 10 mg/m^3. Diesel engine exhaust will be used as a positive control.

During Phase 2, BNW will:

- Prepare study protocols for Sponsor approval
- Procure, receive, quarantine, randomize, and identify study animals
- Perform animal health screening
- Generate RASS and DEE at the specified concentrations during the study period with periodic calibrations of monitoring equipment
- Determine exposure unit concentration homogeneity without animals
- Determine buildup and decay times, T_{90} and T_{10}, without animals
- Determine all chemical parameters according to the frequency schedules outlined in this proposal as modified by the Sponsor
- Perform routine in-life evaluations of toxicologic parameters
- Measure respiratory minute volume
- Determine carboxyhemoglobin in blood
- Determine nicotine and nicotine metabolites in urine
- Determine particle clearance in lungs
- Determine lung particle burdens
- Evaluate hematologic parameters
- Measure organ weights
- Perform other special studies approved by the Sponsor

2029227745

"Use or disclosure of proposal data is subject to the restriction on the Title page of this Proposal."

Source: https://www.industrydocuments.ucsf.edu/docs/hpxl0000

- Perform necropsies and histopathologic evaluations on test animals
- Prepare and submit study reports
- Perform routine health and safety procedures, training, and monitoring
- Perform routine quality assurance inspections of Phase 2 activities and reports
- Perform routine project management functions (i.e., correspondence, monthly reports, project scheduling, and cost monitoring)
- Submit raw materials and data following the acceptance of the chronic study reports.

Toxicologic parameters to be determined in the subchronic study include:

- Mortality rate
- Body weight and body weight gain
- Clinical signs of toxicity
- Carboxyhemoglobin (COHb) in blood
- Nicotine and its metabolites in urine
- Lung burden
- Lung clearance
- Respiratory minute volume
- Hematologic evaluations
- Special studies approved by the Sponsor
- Gross lesions at necropsy
- Selected organ weights
- Microscopic evaluations of specified tissues to characterize exposure-related histopathologic changes of target organs, as well as the dose-response relationship and no-effect dose level.

The carcinogenicity study will expose mice to three concentrations of RASS, to one concentration of DEE as a positive control and to filtered air as sham-exposed controls for 24 months. Parameters to be determined for the carcinogenicity study include:

- Mortality rate
- Body weight and body weight gain
- Clinical signs of toxicity

2029227746

"Use or disclosure of proposal data is subject to the restriction on the Title page of this Proposal."

Source: https://www.industrydocuments.ucsf.edu/docs/hpxl0000

- Hematologic evaluations
- COHb in blood
- Nicotine and its metabolites in urine
- Lung burden
- Lung clearance
- Respiratory minute volume
- Gross lesions
- Selected organ weights
- Microscopic evaluations of specified tissues to determine and confirm exposure-related histopathologic changes of target organs as well as the dose-response relationship and no-effect dose level.

The design and conduct of this study will allow the detection of chronic toxic and neoplastic effects and assessment of the carcinogenic potential of RASS compared with DEE. Through pathologic interpretations and statistical inference (i.e., life-table methods), the following questions may be answered from this study:

- Does RASS exposure result in a significant increase in mortality? Were any increases in mortality caused by tumor formation?
- What is the time course of mortality?
- Does RASS exposure produce unique tumors that are rarely observed in control animals (type)?
- Is the rate of formation of a given tumor in a specific organ of exposed animals different from the rate in control animals or animals exposed to DEE?
- What is the multiplicity of tumors in certain tissues (sites)?
- What is the latency period leading to a particular neoplasm (time)?

These data, together with the exposure concentrations and the biologically monitored effective dose, will provide important information on the relative potency of RASS for producing tumors in mice.

B. EXCEPTIONS AND AMPLIFICATIONS

BNW costed this proposal in two phases. Phase 1 includes costs associated with those activities itemized in Section II.A.1 above. Phase 2 encompasses the total anticipated costs associated with the carcinogenicity study. The recommended subchronic study and special studies are options and are costed as such. The specific activities of Phase 2 are itemized in Section II.A.2 above.

1. Costing

The cost estimates for this proposal are based on the following assumptions:

2029227747

"Use or disclosure of proposal data is subject to the restriction on the Title page of this Proposal."

Source: https://www.industrydocuments.ucsf.edu/docs/hpxl0000

- Contract award by January 1994 and contract completion in December 2000
- An adequate supply of 1R4F cigarettes is to be provided by the Sponsor
- BNW's interpretation of the requirements for this study are based on information provided by the Sponsor (G.J. Patskan to B.J. Greenspan) dated 10/20/92 and 11/19/92 and a subsequent meeting with the Sponsor (G.J. Patskan and W. Reingenhaus) on 12/17/92
- The base contract includes: Pilot Study; Phase 1 activities; and a Carcinogenicity Study
- During the pilot study, three different strains of mice will be placed in the nose-only exposure apparatus and exposed to air on the same daily schedule required for the carcinogenicity study for a period of 13 weeks. The purpose of this study is to determine the relative ability of strains of mice to adapt to the handling and confinement procedures required for a chronic, nose-only inhalation study and to provide data for the selection of an appropriate strain for the chronic study.
- During Phase 1, BNW will design, procure, construct, and test the exposure and monitoring systems for both RASS and DEE at the desirable concentration. Methods and procedures for all chemical analyses will also be developed and established.
- We will conduct a 24-month, nose-only, chronic inhalation carcinogenicity study on RASS at three exposure concentrations with a filtered-air-exposed control, and a DEE-exposed positive control. All parameters outlined in the sample protocol will be performed, with the exceptions and amplifications indicated below.
- An optional subchronic study, as well as some mechanistic studies, are proposed by BNW before the start of the carcinogenicity study. Based on data from the pilot study (described above) and other available information, one strain of mouse will be utilized. The purpose of this subchronic study is to allow BNW to resolve any technical difficulties, establish laboratory procedures, and confirm the appropriate exposure concentrations and toxicologic parameters for the chronic study. The costs of these studies are proposed separately from the base contract.

2. Schedules

At this time, BNW expects to have facilities available to perform the pilot study and the generation and monitoring development aspect of Phase 1 immediately after the proposed contract award date of January 1994. All Phase 1 activities will be completed by May 1995, followed by a 3-month approval period for the Sponsor. Phase 2 work will proceed as outlined in the Milestone Schedules, which are based on our experience with work for NTP and other industrial sponsors. The proposed contract completion date is December 2000.

3. Pilot Study to Select Mouse Strain

The C57Bl/6 mouse is the preferred strain of mice for this study because it is the only strain that has been studied and reported to develop lung tumors from exposure to both mainstream cigarette smoke and diesel engine exhaust. However, some inbred mouse strains like the C57Bl/6 are hyperactive, difficult to handle, and may not be able to tolerate the restraint tubes used for the nose-only study. Therefore, BNW proposes to perform a pilot study immediately after contract award to determine if C57Bl/6 mice can be used for this study. Two other strains, B6C3F1 and CD-1, will be included for comparison. The B6C3F1 was chosen because of the large data base available on this strain. The CD-1 is a more docile

2029227748

"Use or disclosure of proposal data is subject to the restriction on the Title page of this Proposal."

Source: https://www.industrydocuments.ucsf.edu/docs/hpxl0000

strain and may adapt better to the conditions of the study. Every effort will be made to train and acclimate the mice to daily handling and 6 hours of restraint in the exposure apparatus.

4. Proposed Subchronic Study

There are many uncertainties in designing and fabricating generation and monitoring systems for an inhalation study. At BNW, we have always performed some pilot and/or prechronic studies before conducting a chronic study. A prechronic study allows us to evaluate the exposure system, solve technical difficulties, establish laboratory procedures, and validate the appropriate exposure concentrations selected for the chronic study. Therefore, BNW proposes a subchronic study before the carcinogenicity study, the cost of this study is included as an optional study.

5. Diesel Engine Exhaust at 10 mg/m^3 TPM

In the past, inhalation studies conducted to determine the carcinogenic potential of DEE in mice were performed at a range between 2 and 4 mg/m^3 TPM. Heinrich et al. (1986) reported mice exposed to unfiltered DEE at 4 mg/m^3 had lower body weight compared to mice exposed to filtered DEE or control mice. Even though there is justification for a study design using positive-control DEE at the same TPM level as that in the high RASS group, BNW is concerned that 10 mg/m^3 TPM of DEE may exceed the maximum tolerated concentration for mice. Therefore, BNW recommends using two DEE exposure levels of 3 and 10 mg/m^3 in the subchronic study. After completing the subchronic study, one of these exposure levels will be chosen for the chronic study.

The TPM output of modern diesel engines is considerably less than that from older models. However, the output of nitrogen oxides has not been significantly reduced. To achieve a DEE TPM concentration of 10 mg/m^3 may require dilution of the engine exhaust by only a factor of two. This could result in a nitric oxide concentration in the exposure of as high as ~44 ppm, a value that may not be tolerated by mice on a chronic study and must be considered when choosing an appropriate DEE exposure concentration.

6. Number of Animals for Carcinogenicity Study

The OECD Guideline 451 states:

"In order for a negative test to be acceptable, it should meet the following criteria:

- No more than 10% of any group is lost due to autolysis, cannibalism, or management problems
- Survival of all groups is no less than 50% at 18 months for mice."

It is our opinion that some mice will die in the early part of the nose-only study due to inability to adapt to the exposure apparatus. BNW recommends using 60 mice/sex/group rather than 50 mice/sex/group for the study. The additional 10 mice/sex/group are intended to minimize the impact of early deaths on the validity of the study.

7. Duration of the Carcinogenicity Study

The OECD Guideline 451 states:

"It is necessary that the duration of a carcinogenicity test comprises the majority of the normal life span of the animals to be used . . . . Generally, the termination of the study

2029227749

"Use or disclosure of proposal data is subject to the restriction on the Title page of this Proposal."

Source: https://www.industrydocuments.ucsf.edu/docs/hpxl0000

should be at 18 months for mice. However, for certain strains of mice with greater longevity and/or low spontaneous tumor rate, termination should be at 24 months . . . ."

In this proposal, BNW recommends that the inhalation period be performed for 24 months, although the study will be terminated earlier if 75% mortality is reached in the low RASS or filter-air-exposed groups. The costs for this proposal are based on a 24-month study.

8. Clinical Observations

The protocol outline provided by the Sponsor requests "the general nonsystematic observation of all mice at least twice a day, and a careful observation according to checklist once a day on four mice/sex/group." BNW recommends that all mice be observed at least twice daily (in the early morning and late afternoon, at least 6 hours apart, 7 days/week) for mortality and moribundity. Each core study mouse will be formally examined for clinical signs of toxicity and tumor development at 4-week intervals. These observations will be recorded on a Xybion Path/Tox computer system (Xybion Medical Systems, Cedar Knolls, NJ). Signs of toxicity and/or palpable tumors first detected at times other than the formal 4-week observations will be noted and recorded on a special form designed by BNW. This information will then be entered into the computer system at the time of the next formal examination.

9. Food Consumption

Previous experience in our laboratory indicates that food consumption data generated from inhalation studies are usually not worth the effort required to obtain the data. Powdered feed, as opposed to pelleted feed, would be required for food consumption data. Malocclusion may occur and require continual clipping of the teeth. During the clipping procedure, teeth may be crushed or other physical injury may occur. Mice may urinate and defecate in the food jar, resulting in unsanitary conditions that promote infection. These incidents could result in unacceptable loss of animals and may compromise the interpretation of the study. Additionally, the individual cage unit is used to hold the restraint tube (with the animal inside) before loading on the exposure system. Placing individual food jars in each cage to measure food consumption complicates this procedure. Therefore, BNW recommends deleting the food-consumption measurements. We will make visual observations and compare food consumption of filtered-air-exposed controls and exposed groups. The cost of this proposal does not include food-consumption measurements. Should the Sponsor require measurements of food consumption, we will include this cost in our "Best and Final" negotiations.

10. Ophthalmoscopic Examinations

Eye defects were observed in about 12% of C57Bl/6 mice at Jackson Laboratories (Green, 1968). Lesions reported include micro-ophthalmia, missing eyes, and varying degrees of ophthalmia in one or both eyes. This situation progressively worsens with age and it is not unusual for more than 50% of C57Bl/6 mice to be blind at the time of terminal necropsy of a chronic study. BNW recommends deleting the ophthalmoscopic examination; therefore, the cost of this proposal does not include the ophthalmoscopic examination outlined by the Sponsor.

11. Differential White Cell Count

The protocol outline requests "light microscopic evaluation of fixed and stained blood smears to differentiate and count leukocyte types at 12 and 18 months, as well as prior to terminal necropsy." The risk of losing mice with repeated blood collection under diethyl ether narcosis (see Section II.B.12) may ultimately invalidate a study. Furthermore, a differentiated white cell count alone does not provide all the information needed to interpret the results. Therefore, BNW recommends that a complete blood count (CBC) be performed at the time of terminal sacrifice on 15 mice/sex/dose group and that leukocyte differential smears be made at this time (or at moribund sacrifice) on all mice from all dose

2029227750

"Use or disclosure of proposal data is subject to the restriction on the Title page of this Proposal."

Source: https://www.industrydocuments.ucsf.edu/docs/hpxl0000

groups. If statistically significant treatment-related changes are observed in the CBC, then leukocyte differential counts would be done on the remaining 45 mice/sex/dose group. A CBC includes determination of erythrocyte count, volume of packed red cells, hemoglobin concentration, red cell indices, leukocyte count, leukocyte differential, and platelet count. These analyses are determined using an automated multiparameter hematology instrument. We have costed this proposal according to this recommendation.

12. Anesthesia for Terminal Blood Collection and Euthanasia

The protocol outline provided by the Sponsor specifies that terminal blood samples be obtained while the animals are under ether anesthesia. BNW proposes that terminal blood samples be obtained from the supra-orbital sinus under 70% carbon dioxide (CO_2) anesthesia. For the past several years, our data base for hematologic parameters has been obtained using this method, which is specified in protocols for studies for NTP and other sponsors. The method we routinely use for rodent euthanasia is exsanguination following CO_2 anesthesia. If the Sponsor objects to the use of CO_2, BNW proposes using methoxyflurane as the anesthetic.

13. Disposition of Moribund Animals and Animals Unsuitable for Continued Exposure

Animals with large masses or other conditions interfering with their ability to eat, drink, urinate or defecate; major injuries or ulcers related to husbandry or treatment; debilitating conditions or other conditions indicating pain or suffering, as judged by a laboratory animal veterinarian, toxicologist, or an experienced laboratory animal specialist, will be immediately sacrificed as moribund to avoid further pain or distress. The strain of mice chosen for the study may have a relatively higher incidence of spontaneous mammary tumors that, in older animals, can attain a size that interferes with placement of the mice in the animal holding tubes of the nose-only exposure units. Because of the unique requirements of nose-only exposure, premature loss of animals to the study because of large mammary tumor masses, which would otherwise not be life-threatening must be anticipated. Therefore, BNW proposes to establish criteria with the Sponsor for determining when mammary tumor masses are too big to allow placing mice in the holding tubes. When and if this situation arises, we will continue to hold the mice in the study and sacrifice them at the time of terminal necropsy.

14. Histopathology

a. Morphometry of Laryngeal Epithelia. As described in the protocol provided by the Sponsor, we will perform morphometric measurements at several sites on the mucosal epithelium of larynges of all mice, using the hematoxylin and eosin (H&E) slides prepared for histopathologic examination. Our proposed method for performing these measurements is presented in Section III of this proposal. The cost for this procedure is included in the estimated cost of histopathology in the basic study.

b. Histology of Lungs. We will trim and prepare sections from the lungs as described in the method of Lamb and Reid (1969) for trimming rat lungs. However, since the proposed study utilizes mice, which have much smaller lungs than rats, it will be more difficult to consistently obtain single sections containing the junctions of all major branches with the mainstem bronchus of the left lung. We anticipate some variation in the number of mice per group in which sections of left lung containing all major branches of the mainstem bronchus are available.

c. Evaluation of Goblet Cell Populations in Respiratory Tract. Our proposed method for counting goblet cells in selected areas of the nose, trachea, and lungs is described in Section III of this proposal. We propose, as an alternate method to counting numbers of goblet cells per high power field as described in the method of Lamb and Reid (1969), to utilize the unit length method of Monticello et al. (1990), which expresses number of cells present per millimeter of basement membrane. This method provides a more accurate measurement of area evaluated.

20292275

"Use or disclosure of proposal data is subject to the restriction on the Title page of this Proposal."

Source: https://www.industrydocuments.ucsf.edu/docs/hpxl0000

15. Carboxyhemoglobin (COHb)

The protocol outline requests that a COHb assay be conducted on three mice/sex/group using diethyl ether narcosis at 6-month intervals. BNW proposes to include 12 mice/group in the chronic study for this assay. Five mice/group will be bled at 6, 12, and 18 months under 70% CO_2 anesthesia. Five mice/sex/group from the core study animals will be used at 24 months. The mice will be allowed to recover at 6 and 12 months. Some mice may die from the procedure, others may die from natural causes by 18 months; however, it is anticipated that 12 mice will be sufficient to allow a sample group size of five mice/group at each timepoint. Five mice/sex/group will provide more statistical power.

16. Proposed Cell Proliferation Assays of Respiratory Tract Tissues in the Subchronic Study

In addition to standard histopathologic examination of respiratory tract tissues using H&E sections, the protocol provided by the Sponsor calls for morphometric examination of laryngeal epithelia at several sites, as well as examination of Alcian Blue/PAS-stained sections of respiratory tract to evaluate goblet cell populations. We propose to perform additional assays on respiratory tract tissues to evaluate epithelial cell replication rates in nose, larynx, and lung tissues of exposed and control mice using a technique already being utilized in our laboratory. Nuclei of replicating cells will be labeled immunohistochemically using a commercially available monoclonal antibody (PC 10) to proliferating cell nuclear antigen (PCNA), an endogenous nuclear protein. Use of this assay will allow us to compare cell turnover rates in mucosal epithelium of respiratory tract of exposed and control mice. A detailed description of the proposed method is provided in Section III of this proposal. The cost estimate for this optional assay is provided.

17. Proposed Protein/DNA Adducts Study in the Subchronic Study

Room-aged sidestream cigarette smoke contains many of the same compounds that are present in mainstream smoke, including polycyclic aromatic hydrocarbons (PAHs), tobacco-specific nitrosamines, 4-aminobiphenyl and other constituents (Dube and Green, 1982). The contributions of these compounds to tumor development and other health problems need to be evaluated. One method that has received considerable attention is analysis of tissues and/or body fluids for the presence of adducts to proteins and DNA. We propose to assay selected tissues from mice in the subchronic study for the presence of protein and DNA adducts. A detailed description of the proposed method is provided in Section III of this proposal. The cost estimate for this optional assay is provided.

18. Proposed Enzyme Activity Assays in the Subchronic Study

Metabolism is an important determinant of the activity of foreign compounds that enter the body (Sipes and Gandolfi, 1991). Bioactivation or deactivation, distribution, duration of activity, and excretion of a xenobiotic may all be dependent on its metabolism. Some enzymes are substrate- or functional-group-specific while others exhibit broad and overlapping substrate specificities. Metabolism is generally divided into two broad categories. Phase I metabolism involves oxidation, reduction, and hydrolysis; a prime function of these reactions is to expose functional groups (e.g., -OH, -SH, $-NH_2$, -COOH). Phase II reactions are biosynthetic reactions in which a foreign compound or a Phase I metabolite is covalently linked to an endogenous substrate resulting in a conjugate. Phase I metabolites, with their resulting functional groups, are generally electrophilic and will readily react with nucleophilic compounds in the body. These may be the Phase II substrates, in which case the conjugates formed are generally inactivated and excreted from the body, or they may covalently bind with important macromolecules in the body such as DNA and potentially lead to altered function and/or carcinogenesis (Guengerich, 1988).

We propose to look at two of the key enzymes of metabolism; the cytochrome P-450 monooxygenase system, a Phase I enzyme, and glutathione-S-transferase (GST), a Phase II enzyme. A detailed description of the proposed method is provided in Section III of this proposal. The cost estimate for this optional assay is provided.

2029227252

"Use or disclosure of proposal data is subject to the restriction on the Title page of this Proposal."

Source: https://www.industrydocuments.ucsf.edu/docs/hpxl0000

19. Proposed Studies to Evaluate the *In Vivo* Genotoxic Effects of RASS and Diesel Exhaust on Murine Lung Cells in the Subchronic Study

The role of chromosomal aberrations in carcinogenesis has been the subject of extensive research (Frenkel et al., 1991). Studies on some types of human cancers such as retinoblastoma (Hansen and Cavene, 1987; Knudson, 1985; Murphree and Benedict, 1984) and colorectal carcinoma (Vogelstein et al., 1988) have provided convincing evidence that chromosomal aberrations and point mutations are involved in carcinogenesis. Chromosomal aberrations produced by exposure to physical or chemical agents *in vivo* can be detected using the micronucleus test (Heddle, 1973; Heddle and Carrano, 1977). Recently we have demonstrated that micronuclei can be measured in mammalian lung cells and can be used effectively as indicators of chromosomal aberrations induced *in vivo* (Heddle et al., 1990; Khan and Heddle, 1991, 1992). A dose-dependent increase in the number of micronuclei induced in the lung cells by chemicals and x-rays was clearly evident in these experiments. Lungs are often subject to highly localized chemical concentrations during inhalation exposure. Lung tissue assays can be particularly advantageous in assessing damage to the genetic material induced *in vivo* by suspect inhaled substances. BNW has the facility and technical capability to perform the newly developed *in vivo* mammalian lung cell micronucleus test. We propose to perform this assay to determine if RASS or diesel exhaust cause chromosomal damage in the lung cells of mice during the subchronic study.

A detailed description of the proposed method is provided in Section III of this proposal. This proposed study is presented as an option and is costed as such.

20. Proposed Big Blue™ Mouse Mutation Assay in the Subchronic Study

The relationship between the mutagenicity and carcinogenicity of chemicals has been studied extensively. Most of the mutagenicity data on chemicals are derived from *in vitro* microbial and cultured mammalian cell assays. Although there is some evidence of a general correlation of mutagenicity with carcinogenicity, these *in vitro* tests are not highly accurate predictors of carcinogenicity in life-span rodent studies with many chemicals. Recently developed transgenic mouse strains provide a way to evaluate mutagenicity in specific tissues in exposed animals with a short-term assay (Kohler et al., 1990). The use of animals for mutagenicity assays is more realistic than *in vitro* tests because the functions of distribution and tissue-specific metabolism are operative. Further, cell lines used in the *in vitro* assays may have altered DNA repair mechanisms and metabolic pathways in comparison to cells in intact tissues *in vivo*.

Stratagene, Inc. (La Jolla, CA) has developed strains of mice containing the lambda bacteriophage shuttle vector (Big Blue mouse). We propose to use a Stratagene Big Blue mouse system to analyze the mutagenicity of DEE and RASS by inhalation exposure. A detailed description of the proposed method is provided in Section III of this proposal. The cost estimate for this optional assay is provided.

21. Lung Clearance and Lung Burden

The protocol outline requests that particle clearance from the lungs be measured at 15 and 18 months using a flow cytometric method to be determined. As an alternative to the use of flow cytometry, BNW proposes to chemically assess particle clearance by exposing mice to titanium dioxide (TiO_2) particles. To characterize the lung clearance curve more fully, BNW further proposes to utilize four groups of four mice/sex at 0, 3, 30, and 90 days (time points are tentative) following the exposure to TiO_2 at 15 months. The optimum time points for sampling will be determined during the subchronic study. A detailed description of the proposed method is provided in Section III of this proposal.

BNW does not have a workable method for determining lung burden for RASS at this time. Methods to determine lung burden will be developed in conjunction with the Sponsor and will be incorporated into the study design. The cost of performing the lung burden is not included in this proposal.

2029227253

"Use or disclosure of proposal data is subject to the restriction on the Title page of this Proposal."

Source: https://www.industrydocuments.ucsf.edu/docs/hpxl0000

2029227754

Source: https://www.industrydocuments.ucsf.edu/docs/hpxl0000

III. TECHNICAL APPROACH AND METHODS

A. STATEMENT OF WORK

The basic design for the proposed studies will comply, in general, with the study guidelines provided by the Sponsor. The studies will be performed in basic compliance with OECD guideline 451 and the NTP recommendations for carcinogenicity studies. They will also be performed in accordance with the *Guiding Principles in the Use of Animals in Toxicology* adopted by the American Society of Toxicology and will conform to GLP regulations (40 CFR 792).

B. STUDY DESIGN

The draft protocols for the proposed studies are presented in Appendix A.

1. Exposure Group Assignments

a. Pilot Study. The number of mice required for the 13-week pilot study is as follows:

Number of:	Mice		Sexes		Strains		Total
Pilot Study	15	x	2	x	3	=	90

The following is the experimental design for the pilot study:

(1) In-Life and Terminal Evaluations

Number of Mice/Strain	Daily Observations[a]	Clinical Signs[a]	Body Weights[b]	Terminal Gross Necropsy[c]
15M/15F	15M/15F	15M/15F	15M/15F	As needed

[a]All survivors to that study day (twice daily for moribundity, mortality, and clinical signs)
[b]All survivors to scheduled weighing day
[c]Necropsy will be conducted on all mice found dead and on surviving mice showing signs of severe stress

b. Subchronic Study. The number of mice required for this study is as follows:

Exposure Group	Number of Mice			Number of Exposure Concentrations		Total	
	Males	Females				Males	Females
Core Study--Treated	15	15	x	4	=	60	60
Core Study--Control	15	15	x	1	=	15	15
Lung Clearance--Treated	18	0	x	4	=	72	0
Lung Clearance--Control	18	0	x	1	=	18	0
Big Blue™ and Micronuclei--Treated	10	10	x	4	=	40	40
Big Blue™ and Micronuclei--Control	10	10	x	1	=	10	10
DNA Adducts--Treated	5	5	x	4	=	20	20
DNA Adducts--Control	5	5	x	1	=	5	5
Enzyme Assay--Treated	6	6	x	4	=	24	24
Enzyme Assay--Control	6	6	x	1	=	6	6
Sentinels	5	5	x	1	=	5	5
				Total	=	275	185

20292755

"Use or disclosure of proposal data is subject to the restriction on the Title page of this Proposal."

Source: https://www.industrydocuments.ucsf.edu/docs/hpxl0000

The following is the experimental design for the subchronic study:

(1) Basic Design

Test Group	Target Exposure Concentration (mg/m^3)	Total Number of Mice	Number of Core Study Mice[a]	Number of Special Study Mice[b]
Control	0	54M/36F	15M/15F	39M/21F
RASS	1	54M/36F	15M/15F	39M/21F
RASS	10	54M/36F	15M/15F	39M/21F
DEE	3	54M/36F	15M/15F	39M/21F
DEE	10	54M/36F	15M/15F	39M/21F
Sentinels	None	5M/5F	--	--

[a]Including five males and five females for recovery
[b]See Section III.B.1.b.(4) for allocation of these mice (p. III-3)

(2) In-Life Evaluations

Text Group	Target Exposure Concentration (mg/m^3)	Total Number of Mice	Daily Observations[a]	Clinical Signs[b]	Body Weights[b]
Control	0	54M/36F	54M/36F	15M/15F	15M/15F
RASS	1	54M/36F	54M/36F	15M/15F	15M/15F
RASS	10	54M/36F	54M/36F	15M/15F	15M/15F
DEE	3	54M/36F	54M/36F	15M/15F	15M/15F
DEE	10	54M/36F	54M/36F	15M/15F	15M/15F
Sentinels	None	5M/5F	5M/5F	--	--

[a]All survivors to that study day (twice daily for moribundity and mortality)
[b]All core study survivors to that weekly weighing day

2029227756

"Use or disclosure of proposal data is subject to the restriction on the Title page of this Proposal."

Source: https://www.industrydocuments.ucsf.edu/docs/hpxl0000

(3) Terminal Evaluations

Test Group	Target Exposure Concentration (mg/m^3)	Total Number of Mice	Hematology[a,b]	Gross Necropsy, Organ Weights[a]	Complete Histology, Histopathology[c]
Control	0	15M/15F	15M/15F	15M/15F	15M/15F
RASS	1	15M/15F	15M/15F	15M/15F	15M/15F
RASS	10	15M/15F	15M/15F	15M/15F	15M/15F
DEE	3	15M/15F	15M/15F	15M/15F	15M/15F
DEE	10	15M/15F	15M/15F	15M/15F	15M/15F

[a]Ten/sex/group at the time of terminal necropsy. The remaining five mice/sex/group will be evaluated after a recovery period only if abnormalities are observed in the ten mice/sex/group at terminal sacrifice.
[b]Blood from five mice/sex/group will be analyzed for COHb.
[c]All mice that die before terminal necropsy and all surviving mice in the highest exposure group with at least 60% survivors (and all survivors from higher exposure concentrations) at the time of terminal necropsy. If any lesion is encountered, which may be exposure-related, that organ will be examined in the next lower exposure group until an exposure group can be found without the exposure-related change. Target organs will only be examined in the recovery mice.

(4) Special Studies

Test Group	Target Exposure Concentration (mg/m^3)	Lung Clearance	Micronuclei and Big Blue™ Mouse Assay	DNA Adducts	Enzyme Assays
Control	0	18M	10M/10F	5M/5F	6M/6F
RASS	1	18M	10M/10F	5M/5F	6M/6F
RASS	10	18M	10M/10F	5M/5F	6M/6F
DEE	3	18M	10M/10F	5M/5F	6M/6F
DEE	10	18M	10M/10F	5M/5F	6M/6F

c. Carcinogenicity Study. The number of mice required for the carcinogenicity study is as follows:

Exposure Group	Mice		Sex		Number of Exposure Concentrations		Total
Core Study--Treated	60	x	2	x	4	=	480
Core Study--Control	60	x	2	x	1	=	120
Lung Clearance and Lung Burden--Treated	18	x	2	x	4	=	144
Lung Clearance and Lung Burden--Control	18	x	2	x	1	=	36
COHb--Treated	12	x	2	x	4	=	96
COHb--Control	12	x	2	x	1	=	24
Sentinel	15	x	2	x	1	=	30
						Total	930

20292252

"Use or disclosure of proposal data is subject to the restriction on the Title page of this Proposal."

Source: https://www.industrydocuments.ucsf.edu/docs/hpxl0000

The following is the experimental design presented in tabular form for the carcinogenicity study.

(1) Basic Design

Test Group	Target Exposure Concentration (mg/m^3)	Total Number of Mice	Core Study	Lung Clearance[a]	COHb[b]
Control	0	90M/90F	60M/60F	18M/18F	12M/12F
RASS	1	90M/90F	60M/60F	18M/18F	12M/12F
RASS	3	90M/90F	60M/60F	18M/18F	12M/12F
RASS	10	90M/90F	60M/60F	18M/18F	12M/12F
DEE	--[c]	90M/90F	60M/60F	18M/18F	12M/12F
Sentinels[d]	None	15M/15F			

[a]Four mice/sex/group will be sacrificed at 0, 3, 30, and 90 days after titanium dioxide exposure. Two additional mice/sex/group are included to be used if needed.
[b]Five mice/sex/group at 6, 12, and 18 months for COHb determinations. Mice will be retained on study after the 6- and 12-month blood collections and removed from exposure after the 18-month collection. At 24 months, five mice/sex/group will be used for COHb determination.
[c]To be determined from results of subchronic study
[d]Sentinel mice will be housed in the animal holding room and will not be exopsed

(2) In-Life Evaluations

Test Group	Target Exposure Concentration (mg/m^3)	Total Number of Mice	Daily Observations[a]	Body Weight[b]	Clinical Signs[c]
Control	0	90M/90F	90M/90F	60M/60F	60M/60F
RASS	1	90M/90F	90M/90F	60M/60F	60M/60F
RASS	3	90M/90F	90M/90F	60M/60F	60M/60F
RASS	10	90M/90F	90M/90F	60M/60F	60M/60F
DEE	--[d]	90M/90F	90M/90F	60M/60F	60M/60F
Sentinels[e]	None	15M/15F	15M/15F	--	--

[a]All survivors to that study day (twice daily for moribundity and mortality, at least 6 hours apart, before 10:00 am and after 2:00 pm)
[b]All core study survivors to that study day (weekly for the first 13 weeks, 4-week intervals thereafter, every 2 weeks during the last 13 weeks, if needed)
[c]All core study survivors every 4 weeks
[d]To be determined from results of subchronic study
[e]Five male and five female sentinel mice will be bled for viral serology profiles then necropsied at 6, 12, and 18 months.

2029227758

"Use or disclosure of proposal data is subject to the restriction on the Title page of this Proposal."

Source: https://www.industrydocuments.ucsf.edu/docs/hpxl0000

(3) Terminal Evaluations

Test Group	Target Exposure Concentrations (mg/m^3)	Total Number of Mice	Gross Necropsy and Histology	Histopathology[a]	Hematology (Complete Blood Count)[b]
Control	0	60M/60F	60M/60F	60M/60F	15M/15F
RASS	1	60M/60F	60M/60F	60M/60F	15M/15F
RASS	3	60M/60F	60M/60F	60M/60F	15M/15F
RASS	10	60M/60F	60M/60F	60M/60F	15M/15F
DEE	–[c]	60M/60F	60M/60F	60M/60F	15M/15F

[a]Complete histopathology on control, 10 mg/m^3 RASS, DEE, and early death mice. Respiratory tract and gross tumors on 1 and 3 mg/m^3, and target tissues to no-effect level

[b]White blood count differential smear will be made on all moribund sacrificed and terminal necropsy mice, but will not be evaluated unless significant abnormalities are found on the hematology samples

[c]To be determined from results of subchronic study

d. Exposure Schedule. Exposure concentrations for the proposed subchronic study are 0, 1, and 10 mg/m^3 RASS and 3 and 10 mg/m^3 DEE. Exposure concentrations for the carcinogenicity study are 0, 1, 3, and 10 mg/m^3 RASS. The concentration for DEE for the carcinogenicity study will be chosen after the completion of the subchronic study.

For the chronic study, 6- to 7-week-old mice will be exposed to RASS, DEE, or to filtered air for 6 hours + T_{90} per day for up to 104 weeks. Animals will be exposed 5 days/week, excluding weekends and holidays. An exposure day missed due to equipment failure will not be made up during the study.

2. Quarantine, Housing, and Sentinel Animals

a. Quarantine Procedures. Mice will be picked up on arrival at the Pasco airport and transported directly to the Life Sciences Laboratory (LSL)-II in a BNW air-conditioned animal transport truck. Animal shipping cartons will be examined upon arrival for evidence of conditions likely to permit exposure to pathogens (soiled, wet, or otherwise damaged). If acceptable, the exterior of the cartons, except filters, will be wiped down with a chlorine dioxide solution (ABQ sterilant/disinfectant, or equivalent). The cartons will then be moved to the door of a designated quarantine room for removal of the mice in a prescribed manner to avoid direct or indirect contact of the mice with the exterior of the cartons. While being removed from the cartons, the mice will be examined for evidence of shipping stress. Acceptability at this point will depend on the condition of the animals, and the length of time the animals were in transit and environmental conditions to which they were exposed en route. After the cartons are removed, appropriate sanitation procedures will ensure cleanup of the area.

Within 48 hours of arrival, ten mice (five males and five females) from the chronic study shipment will be randomly selected for preexposure health screening. Screening procedures will include necropsy, microscopic examination of selected tissues, nasopharyngeal culture, and serologic testing for antibodies. Serologic testing will be for antibodies to Sendai virus, pneumonia virus of mice (PVM), mouse hepatitis virus (MHV), minute virus of mice (MVM), Theiler's murine encephalomyelitis virus (GDVII) and *Mycoplasma pulmonis*. Additional examination and testing will be done if health status information from the supplier is insufficient. A second health screen involving ten mice (five males and five females), randomly selected from the group remaining after mice are selected for the study, will be initiated 3 weeks after the arrival date. The 3-week period allows antibodies to develop if exposure to a pathogen occurred in transit. Procedures will be the same as those for the first health screen, except that the nasopharyngeal cultures will be omitted.

2029227759

"Use or disclosure of proposal data is subject to the restriction on the Title page of this Proposal."

Source: https://www.industrydocuments.ucsf.edu/docs/hpxl0000

For the Phase 1 studies, mice from each shipment will undergo health screening 3 weeks after arrival only, unless their health status has not been well defined by the supplier. If this is the case, then appropriate examination and testing will be done to screen for pathogens on arrival.

For the subchronic study, core study mice and Big Blue mice will be housed in the same room from the time of arrival. Health screening will be done only at 3 weeks after arrival. Procedures will be the same as those performed at 3 weeks for the chronic study.

The laboratory animal veterinarian will make a visual inspection of the animals to be used just prior to their release for the study. The Sponsor will be notified promptly if any significant infection or other disease condition is recognized.

b. Housing. Initially, mice will be housed approximately ten/cage in 160-in^2 wire-bottom cages. Approximately 5 days after arrival, the mice will be moved into individual wire-bottom cages with ~25 in^2 of floor space, where they will be housed for the duration of the study. Drinking water will be provided continuously by automatic watering valves, except during the nose-only exposure period. The mice will be housed in a room adjacent to the exposure room. Room temperature will be maintained at 75 ± 3°F. All animal racks will be supplied daily with clean stainless-steel excreta pans containing absorbent paper. The absorbent paper will be sterilized prior to use and will not be treated with neomycin or other bacteriostatic agents.

c. Feed. Pelleted NIH-07 open formula rodent diet will be provided. We use this feed in preference to commercial certified diets for most studies because of its wide use in government-sponsored toxicology studies (NTP) and because the NTP contaminant monitoring standards exceed those of "certified" feeds.

d. Sentinel Animals. Thirty sentinel mice will be included in the chronic study to monitor for the occurrence of infectious disease. Sentinels will be sacrificed at 6, 12, and 18 months (five males and five females at each interval). Sera will be collected from five male and five female core study mice at terminal sacrifice. Sera collected at the first three intervals will be tested at BNW for antibodies to Sendai virus, PVM, GDVII, MVM, MHV, and *M. pulmonis*. Those collected at the termination of the study will be sent to Microbiological Associates for testing for the same antibodies plus mouse adenovirus, K virus, cilia-associated respiratory bacillus, ectromelia, enzootic diarrhea of infant mice, lymphocytic choriomeningitis virus, reovirus 3, mouse cytomegalovirus and polyoma virus. Sentinel animals will also be examined for parasitic infection and selected tissues from each of the mice will be examined microscopically for evidence of infection or other disease. Should there be an indication of significant infectious disease among animals during the study, bacterial cultures or other appropriate testing will be done in order to determine the cause of the infection.

Animal health will also be monitored by routine daily observations, monthly examinations for clinical signs, and pathological examinations. The laboratory animal veterinarian will review the weight data, clinical sign data, and the necropsy reports. Any suspected disease conditions, other than those thought to be caused by experimental exposure, or as a consequence of aging, will be investigated by the veterinary staff.

Ten sentinel mice will be included in the subchronic study for viral antibody testing at the termination of the study. Testing will be for Sendai virus, PVM, GDVII, MVM, MHV, and *M. Pulmonis*.

e. Acclimatization to Exposure Units. During the quarantine period, the mice will be placed in nose-only exposure restraint tubes daily to allow them to adapt to confinement. The period of confinement will be increased gradually to 6 hours/day by the day preceding the first exposure. Only mice that adapt to the restraint tubes will be randomized, assigned to exposure concentration groups, and identified individually with a unique number.

2029227760

"Use or disclosure of proposal data is subject to the restriction on the Title page of this Proposal."

Source: https://www.industrydocuments.ucsf.edu/docs/hpxl0000

f. Randomization and Identification. Animals will be randomly assigned to exposure groups using body weight as a blocking variable to assure that there are no statistically significant differences in initial group mean body weight using the Xybion Path/Tox system. Animals will be identified individually by tail tattoo.

g. Nose-Only Exposure Unit. The inhalation exposures will be performed with modified Cannon flow-past nose-only exposure units (Cannon et al., 1983), developed and patented by BNW. The system is designed to provide uniform concentrations of test material at all exposure ports. The exposure system is described in Section IV.

3. Toxicology

a. Observations. Individual animal body weights for exposure and control group animals will be recorded weekly during the pilot and subchronic studies. For the chronic study, weights will be recorded weekly for the first 13 weeks and at 4-week intervals thereafter. The final weighing will occur before the scheduled terminal necropsy. If life-threatening tumors develop, or if a significant number of deaths occur in a group, the weighing frequency may be increased to every 2 weeks on approval by the Sponsor. It is anticipated that animals will be weighed every 2 weeks for the final 13 weeks of the chronic study.

All animals will be observed at least twice daily (in the early morning and late afternoon, at least 6 hours apart, 7 days/week) for mortality and moribundity. Each animal, with the exception of the sentinels, will be formally examined for clinical signs of toxicity at 4-week intervals. These observations will be recorded on the Xybion Path/Tox system. Signs of toxicity first detected at times other than at the formal 4-week observations will be noted and recorded on the Daily Observation Record.

Animals determined by a laboratory animal veterinarian, toxicologist, or toxicology specialist to be moribund or to be experiencing substantial pain or distress will be promptly euthanized. Criteria for euthanasia have been described in a standard operating procedure (SOP) to be used with this study.

If the cumulative mortality of any exposure concentration jeopardizes the ability to draw the appropriate conclusions on the carcinogenicity of the test article, the group will be terminated before the scheduled sacrifice date following approval by the Sponsor.

b. Data Collection and Review. Toxicology data will be collected by the Xybion Path/Tox system, or manually entered on specific forms. The type of data and the method of collection dictates how the data are reviewed.

An example of this process involves collecting body weights and clinical signs in both subchronic and chronic studies, as detailed below. An animal resources technician or toxicology specialist places an animal on the weighing balance, which automatically transmits the weight data to the Xybion Path/Tox system. Clinical signs are entered into the Xybion Path/Tox system using the keyboard. A copy of the data is printed when the session is completed. The toxicology specialist assigned to this study reviews these data promptly, paying particular attention to weight loss, any abnormal weight gain, or unusual clinical signs. Weights that fall outside a predetermined range are investigated as soon as possible by the toxicology specialist or animal resources technician, who in turn verifies that food and/or water were available, etc. This is documented and is stored as raw data in the study file. Printouts and review comments are routed among the scientific staff for review, including the toxicologist, who checks for accuracy and completeness, and the principal investigator/study director and clinical veterinarian, who examine the data for exposure and husbandry-related effects. Any abnormalities found during this review are checked by one of the above staff members. A weekly review involving all toxicologists, toxicology specialists, and veterinary staff is conducted and any concerns are discussed. Monthly and Study Report data are derived from this information.

2029227761

"Use or disclosure of proposal data is subject to the restriction on the Title page of this Proposal."

Source: https://www.industrydocuments.ucsf.edu/docs/hpxl0000

c. Off-Hour Toxicology Supervision. Weekday operations currently extend from 6:00 am to 6:00 pm. Weekend and holiday operations currently extend from 7:00 am to 3:30 pm. In order to assure complete compliance with study designs and SOPs, the toxicology staff provides off-hour supervision. A power operator monitors the building systems at all times. A staff veterinarian is on duty or on call 24 hours/day, 7 days/week.

4. Respiratory Minute Volume

Pulmonary function measurements will be made on six/mice/group during the proposed lung clearance studies in the subchronic and chronic studies and on six mice/sex/group of the core study during months 6, 12, 18, and 24 of the chronic study.

Pulmonary function will be measured by whole-body plethysmography utilizing Flow-Derived Parameters software (Buxco Electronics, Inc; Troy, NY). Animals will be placed in whole-body plethysmograph tubes similar to the containment tubes used during routine exposure. However, all ventilation holes in the tube will be sealed, a soft rubber seal will be incorporated around the animal's neck to seal the thorax from the head, and the rear animal-holding device will be replaced with an O-ring-sealed "plunger" during measurement. Air displaced by expansion-contraction of the thorax during breathing will be conducted through a 0000 Fliesch pneumotachometer.

Pressure drop across the pneumotachometer will be measured with a Validyne DP-45 pressure transducer connected to a Validyne CD-18 carrier demodulator (Validyne; Northridge, CA). The pressure signal from the demodulator will be digitally integrated and calibrated by the Buxco software to derive the tidal volume and the respiration period for each breath.

The Buxco software will record the average tidal volume, and the average respiration period for all breaths measured during each 10-second period over a 10-minute recording session beginning 10 minutes after start of exposure. The recorded data will be analyzed using Microsoft Excel spreadsheet software (Microsoft Corp., Redmond, WA) running on an Apple Macintosh (Apple Computer, Inc.; Cupertino, CA) computer. Minute volumes will be calculated as the average tidal volume multiplied by the reciprocal of the average respiration period over the 10-minute recording period. It is recognized that if the animal moves significantly within the plethysmograph, the seal may be disrupted or erroneous tidal volumes may be recorded. Therefore, all 10-second recorded average minute volumes greater than 1.5 standard deviations (SDs) from the calculated 10-minute mean minute volume will be rejected, and the mean recalculated excluding the rejected data.

5. Nicotine Metabolites in Urine

a. Introduction. Nicotine and nicotine metabolites provide specific markers of exposure to tobacco smoke. For the subchronic and chronic studies, the concentrations of nicotine in the RASS atmospheres will be determined. Determination of the amounts of nicotine metabolites excreted in the urine of the exposed animals will serve to positively demonstrate exposure and the relationship of dose to RASS exposure concentration.

BNW plans to analyze the urine for nicotine, cotinine, 3-hydroxycotinine, and the glucuronic acid conjugates of these compounds. The analytical methodology will closely follow that of Rustemeier et al. (1993). This method involves clarifying the urine, then derivatizing with diethylthiobarbituric acid (DETBA). The analytes are quantified using high-performance liquid chromatography (HPLC) with an ultraviolet (UV)-visible detector at a wavelength of 529 nm.

BNW has not been able to locate literature references citing the metabolic composition of nicotine metabolites in the urine of mice. However, nicotine, cotinine, 3-hydroxycotinine, and their glucuronic acid conjugates provide the bulk of the parent or metabolites excreted in the urine of rats and are expected to

2029227762

"Use or disclosure of proposal data is subject to the restriction on the Title page of this Proposal."

Source: https://www.industrydocuments.ucsf.edu/docs/hpxl0000

be similarly present in mice. Early in the method development phase for analyzing nicotine metabolites in urine, BNW plans to treat a mouse with nicotine by intraperitoneal injection. The urine will be collected and assayed for nicotine metabolites to verify the identification of major nicotine metabolites in the mouse.

After the suitability of the analyte selection has been verified, BNW will expose a limited number of animals to 1 and 10 μg/L RASS. Urine samples will be collected and analyzed to obtain an estimate of the concentration ranges for the metabolites. Thus, concentration ranges will be verified during the subchronic study by collecting urine from a limited number of animals after 4 weeks of exposure.

b. Sampling. Immediately after exposure, animals selected for urine metabolites will be placed in individual rodent metabolism cages. Urine will be collected in ice-cooled tubes for 16 hours. During urine collection, water will be provided to the animals *ad libitum*.

Urine samples will be collected at 6-month intervals during the chronic study corresponding to 6, 12, 18, and 24 months of exposure. Samples from six animals/sex/exposure group/time point will be collected from animals from the 1-, 3-, and 10-μg/L RASS exposures, as well as from the filtered-air control. After collection, urinary creatinine concentrations will be determined for each sample by an automated Jaffe reaction method using a Roche COBAS FARA instrument. The urine samples will then be stored at -70°C until nicotine metabolite analysis.

c. Analytical Methodology

(1) Sample Preparation for Free Metabolites. Urine samples (500 μl) will be centrifuged and the supernatants further clarified through ultrafiltration. An internal standard solution will be added to an aliquot of this clarified urine. The internal standard will be N'-ethylnorcotinine prepared in 6 M sodium acetate, which has been adjusted to pH 4.7. Solutions of potassium cyanide, chloramine-T and DETBA will be added as described by Rustemeier et al. (1993). After vigorous mixing, the solution will be centrifuged and the supernatant transferred to an autosampler vial for analysis by HPLC. The samples will be allowed to react for 13 to 14 minutes prior to analysis.

(2) Sample Preparation for Glucuronic Acid Conjugates. Urine samples (500 μl) will be saturated with potassium carbonate and washed with methylene chloride to remove non-polar metabolites. The aqueous phase will be neutralized with phosphoric acid, and equal amounts of a 0.05-M sodium acetate buffer will be added along with β-glucuronidase (~5000 units/ml final concentration). The samples will be incubated at 37.5°C for 18 hours and centrifuged. The supernatant will be derivatized as detailed above and analyzed by HPLC.

(3) HPLC Analysis Procedure. HPLC analysis will be carried out using a Hewlett-Packard (HP)-1050 liquid chromatograph. The UV-visible detector will be operated at a wavelength of 529 nm. Chromatographic separation will be performed using a 150-mm x 4.6-mm ID, 3-μm particle, Rainin C_{18} column at 40°C. BNW will employ the approximate mobile-phase compositions published by Rustemeier et al. (1993). These conditions will be used as a starting point and adjusted as appropriate to achieve the necessary separation.

The liquid chromatograph will be calibrated using gravimetrically prepared standards of nicotine, cotinine, and 3-hydroxycotinine. The amounts of these compounds in the urine in the nonconjugated form will be determined by direct analysis of the derivatives. The total amount of these compounds will be determined by analyzing urine samples that have undergone enzymatic cleavage. The quantity of the conjugated metabolites will be defined as the difference between the total and free metabolite.

(4) Suitability of Chosen Analytes and Range-Finding. After the general procedures for sample preparation and analysis have been established and the strain of mouse has been selected, BNW will treat a mouse with 1 mg/kg nicotine by intraperitoneal injection. The urine from this animal will

2029227763

"Use or disclosure of proposal data is subject to the restriction on the Title page of this Proposal."

Source: https://www.industrydocuments.ucsf.edu/docs/hpxl0000

be collected for 16 hours after injection. The urine will be analyzed for nicotine, cotinine, 3-hydroxycotinine, and the glucuronic acid conjugates of these compounds. The goal of this study is to demonstrate that the chosen analytes account for a major portion of the nicotine metabolites excreted in the urine of mice. BNW anticipates that the chosen metabolites will account for >50% of the nicotine dose. If the chosen metabolites do not account for a significant percentage of the metabolized nicotine, the contribution due to other nicotine metabolites will be investigated and major metabolites will be quantified as appropriate.

(5) Method Validation. After chromatographic separation has been demonstrated for the chosen metabolites using prepared standards, urine extracts from the 10-μg/L RASS test exposure group will be analyzed using an HP-1050 diode array detector. This instrument will provide an estimate of peak purity by an absorbance ratio technique. Good estimates of purity for the resolved metabolites in the urine extract will confirm chromatographic separation from interfering compounds. If poor peak purity is indicated, chromatographic conditions will be modified to provide the necessary separation.

To demonstrate complete enzymatic cleavage, BNW will obtain urine samples from the 10-μg/L RASS test exposure group. The urine samples will be divided into three portions. The sample portions will be allowed to undergo enzymatic cleavage for 14, 18, and 22 hours, respectively. Enzymatic cleavage will be judged complete if free metabolite concentration does not increase at the following time point. If total metabolite concentration is the same at all three time points, an 18-hour incubation time will be used for the study.

(6) Method Performance Evaluation (MPE). The basic MPE will consist of spiking the metabolite standards into urine blanks at six concentrations each, bracketing the expected concentration of the metabolites in the urine of animals exposed to 1 and 10 μg/ml RASS. The standards will be prepared from alternating preparations of duplicate stock metabolite solutions. The high and low spikes, as well as the blank, will be prepared in triplicate. The spikes will be prepared and analyzed for the free metabolite as previously described for the samples. Standard solutions of the metabolites will be prepared with concentrations matching those of the matrix spikes. These standards will be prepared in water and then derivatized as described for the samples and spikes.

BNW will assess figures of merit for the analytical methods, including linearity, sensitivity, accuracy, precision, recovery, and limits of detection and quantification.

d. Alternative Analytical Methodology Using Liquid Chromatography (LC)/Mass Spectrometry (MS)/MS. In 1994, BNW may acquire a triple quadrupole mass spectrometer for use by the Toxicology Department in support of inhalation studies. This instrument would be equipped with an atmospheric pressure chemical ionization (APCI) interface suitable for use with LC.

The high sensitivity and selectivity provided using the APCI-MS/MS would eliminate the need for sample derivatization and greatly reduce the amount of chromatographic separation needed for quantitative analysis of the urinary nicotine metabolites and glucuronic acid conjugates.

6. Lung Clearance

a. Introduction. The literature indicates that exposure to cigarette smoke and diesel particulate material may impair long-term clearance of dust from the lung (Cohen et al., 1979; McClellan et al., 1986). The purpose of lung-clearance studies is to determine whether or not exposure to RASS alters lung-clearance mechanisms in mice compared to control mice and mice exposed to DEE. Impairment of lung-clearance mechanisms can be evaluated by exposing mice to an insoluble, non-toxic aerosol and comparing lung clearance rates of normal mice to those of mice exposed to RASS and DEE. Lungs with impaired particle-clearance mechanisms will exhibit a slower particle-clearance rate (greater half-life) and higher concentrations of particulate material over time, compared to normal lungs.

2029227764

"Use or disclosure of proposal data is subject to the restriction on the Title page of this Proposal."

Source: https://www.industrydocuments.ucsf.edu/docs/hpxl0000

To perform lung-clearance studies, mice must be exposed to an aerosol that is relatively non-toxic and does not alter lung clearance mechanisms when administered in moderate amounts. In preparation for this proposal, BNW investigated the use of radiolabeled latex or polystyrene spheres. Advantages of using latex or polystyrene spheres are: 1) they are relatively inert; 2) they can be made in very uniform particle sizes; and 3) the presence of the radiolabel allows great sensitivity in measurement of the particle load in the lung. However, it is not possible to synthesize radiolabeled latex spheres using common labeling isotopes such as ^{3}H and ^{14}C because the radiolabel can be leached or exchanged from the sphere over time. It is possible to label latex spheres with radioisotopes of certain metals that decompose by x-ray or gamma-ray emission. However, inhalation studies using these materials pose unique occupational health and environmental hazards which must be mitigated through additional engineering controls, adding to the cost of the study. The cost of radiolabeled latex or polystyrene spheres is also quite high.

Titanium dioxide (TiO_2) is believed to be relatively non-toxic and has been used in a variety of lung clearance studies involving rodents (Ferin and Feldstein, 1978; Ferin and Leach, 1975; Greenspan et al., 1988). The relatively insoluble TiO_2 represents an acceptable choice of materials for lung clearance studies because it does not cause inflammation at low lung burdens (Klosterkotter and Buneman, 1961) and its pulmonary clearance is believed to be mediated primarily via phagocytosis by macrophages (Ferin, 1972), with relatively small amounts being translocated to the lymph nodes under normal conditions (Klosterkotter and Gono, 1971). Titanium dioxide in rodent lungs can also be measured at low concentrations relatively easily using modern atomic spectroscopic techniques such as inductively coupled plasma (ICP)-atomic emission spectrometry (AES). Accordingly, exposure of mice to TiO_2 was chosen for conducting lung-clearance studies.

Lung clearance of TiO_2 has been investigated extensively in rats, although few, if any, studies involving mice have been published. The work of Ferin and Feldstein (1978) indicates a long-term clearance half-life in Long-Evans rats of ~29 to 34 days. The study design proposed below is based on the assumption that similar behavior will be observed in mice. As discussed below, BNW proposes a pilot study that will provide information necessary to design a study specific to mice.

b. Study Design. The goal of lung-clearance studies is to determine the clearance half-life, clearance rate constant, deposition fraction, deposition rate, and pulmonary dose. This will be accomplished by exposing mice to 10 mg TiO_2/m^3 aerosol with a mass median aerodynamic diameter (MMAD) particle size between 1 and 3 μm and measuring the concentration of titanium (Ti) in the lung at various postexposure time points, using ICP-AES.

A preliminary study is proposed wherein analytical methods will be developed and validated, and the TiO_2 exposure system constructed and tested. Near the end of the development phase, 18 mice will be exposed to 10 mg TiO_2/m^3 for 6 hours/day for 3 to 5 days. Subsequently, lung assays for Ti will be used to estimate the lung burden, initial and terminal pulmonary clearance rates and half-lives, and dose to the lung. Pulmonary tidal volume measurements will be included during the exposures to facilitate calculation of deposition fraction and deposition rate. Information from the pilot study will be employed to select appropriate exposure duration and postexposure sampling times for the subchronic study.

For the subchronic study, 18 male mice/exposure group (90 mice including controls) from RASS and DEE exposures are assigned to the lung-clearance study. Immediately after termination of the subchronic RASS and DEE exposures, BNW proposes that these 90 mice be exposed to 10 mg TiO_2/m^3 for 6 hours/day for 5 consecutive days. Pulmonary tidal volume measurements will be made on six mice/exposure group, with measurements being made on one exposure group/day for 5 consecutive days. Following TiO_2 exposure, lung Ti concentrations will be determined by ICP-AES at 0, 1, and 3 days after exposure to determine the initial clearance rate and half-life. The terminal clearance rate and half-life are measured by collecting additional measurements 9, 30, and 90 days after exposure. Using an appropriate model, pulmonary tidal volume and exposure data can be used to calculate the pulmonary dose that can

20292277765

"Use or disclosure of proposal data is subject to the restriction on the Title page of this Proposal."

Source: https://www.industrydocuments.ucsf.edu/docs/hpxl0000

be compared to the pulmonary dose measured by ICP-AES 0 hours after exposure. These data can also be used to calculate deposition fraction and deposition rate.

This study design assumes that lung clearance may be biphasic, with the initial phase being due to ciliary clearance mechanisms and a final phase due to dissolution and other, slower translocation processes such as macrophage phagocytosis. However, if the initial clearance rate occurs more rapidly than 1 to 3 days, the design is still appropriate for a single, first-order clearance process, with a half-life of ~30 days. The design for the subchronic lung-clearance study is shown below.

Exposure Group	Male Mice[a]	Pulmonary Tidal Measurements[b]	Lung Clearance[c]
Control	18	6/group (Day 1)	3/group x 6 time points
1 mg/m^3 RASS	18	6/group (Day 2)	3/group x 6 time points
10 mg/m^3 RASS	18	6/group (Day 3)	3/group x 6 time points
3 mg/m^3 DEE	18	6/group (Day 4)	3/group x 6 time points
10 mg/m^3 DEE	18	6/group (Day 5)	3/group x 6 time points

[a]Male mice exposed (nose-only) to 10 mg TiO_2/m^3, 6 hours/day, for 5 consecutive days immediately following subchronic RASS and DEE study
[b]On the TiO_2 exposure days indicated, pulmonary tidal volume measurements will be made on six male mice per group during TiO_2 exposures
[c]Lung burdens of TiO_2 determined by ICP-AES on three animals/group at 0, 1, 3, 9, 30 and 90 days after termination of TiO_2 exposures

Information acquired from the subchronic study will be used for similar studies for the chronic RASS and DEE studies, in which only a limited number of lung assays can be performed. For the chronic study, BNW proposes that 18 male and 18 female mice per exposure group (180 mice including controls) be removed from control, RASS and DEE exposures after 15 months. These mice will be exposed to 10 mg TiO_2/m^3 for 6 hours/day for 5 consecutive days. Pulmonary-function measurements will be performed on six male and six female mice from each exposure group during the TiO_2 exposures. The TiO_2 lung burden will be determined by ICP-AES in four mice/sex/exposure group (including controls) immediately following exposure, and 3, 30 and 90 days after exposure. The minute volume, initial lung burden, fractional deposition, and the retained lung burden at each postexposure time point will be determined. These data will be compared across exposure groups to determine differences in clearance rate or pulmonary-function measurements. These data will also be compared to those obtained during the subchronic study to discern differences arising from long-term exposure to RASS or DEE. The design for lung clearance assay in the chronic study is shown below.

Exposure Group	Male/Female Mice[a]	Pulmonary Tidal Measurements[b]	Lung Clearance[c]
Control	18M/18F	6/group (Day 1)	4/group x 4 time points
1 mg/m^3 RASS	18M/18F	6/group (Day 2)	4/group x 4 time points
3 mg/m^3 RASS	18M/18F	6/group (Day 3)	4/group x 4 time points
10 mg/m^3 RASS	18M/18F	6/group (Day 4)	4/group x 4 time points
DEE[d]	18M/18F	6/group (Day 5)	4/group x 4 time points

[a]Eighteen male and 18 female mice exposed (nose-only) to 10 mg TiO_2/m^3, 6 hours/day, for 5 consecutive days after 15 months of RASS and DEE exposures; includes two extra mice to be used if needed
[b]On the TiO_2 exposure days indicated, pulmonary tidal measurements will be made on six male mice and six female mice/group during TiO_2 exposures
[c]Lung burdens of TiO_2 will be determined by ICP-AES on four animals/group at 0, 3, 30, and 90 days after termination of TiO_2 exposures
[d]Concentration to be determined

2029227766

"Use or disclosure of proposal data is subject to the restriction on the Title page of this Proposal."

Source: https://www.industrydocuments.ucsf.edu/docs/hpxl0000

c. Experimental Methods

(1) Exposure Methods

(i) Generation of TiO_2. Powdered TiO_2 test material will be aerosolized using a Wright dust-feed mechanism (Model II; BGI, Inc.; Waltham, MA) connected to an air impact mill (Trost GEM-T; Garlock, Inc.; Newton, PA). The Wright dust-feed mechanism was chosen because it is capable of providing a constant output of dust over a long period of time. The test material is packed at a constant pressure (between 1000 and 2000 psi) into a sample cup. The cup is rotated downward at a fixed speed, controlled by a stepping motor, over a stationary scraper blade. Filtered compressed air passes through a groove at the outer edge of the scraper blade, entraining the dust as it is cut away. The air impact mill will be used to provide on-line reduction of the particle size if necessary. The Trost mill uses opposing air jets to cause particle-to-particle impaction and comminution. The flow rates required for the mill are compatible with the proposed nose-only exposure systems. The exposure concentration will be controlled by dilution air flow and the speed of the dust feed mechanism. BNW has performed numerous aerosol generation and characterization tests with this system.

(ii) Exposure Systems. The animals will be exposed to TiO_2 aerosol on Cannon-style nose-only exposure units, as described for the RASS and DEE exposures.

(iii) Characterization of the Exposures. Exposure concentrations will be monitored using real-time aerosol monitors (RAM; RAM-S, MIE Corporation, Billerica, MA). The instrument will be calibrated against chemically analyzed filter samples as described below. The particle size distribution of the aerosol will be determined with a Mercer-style cascade impactor sampling from the breathing zone of the animals. The material collected on each stage will be chemically analyzed as described below, and the resulting mass data will be analyzed and fit to a lognormal distribution to yield MMAD and geometric standard deviation (GSD).

(2) Analytical Chemistry Methods

(i) Test Chemical Procurement and TiO_2 Purity Assay. Reagent-grade TiO_2 sold by Fisher Scientific will be used for exposures. It is not anticipated that this material will require micronizing prior to use in the exposure system. However, BNW has the capability to micronize the test material if necessary to achieve an aerosol MMAD in the range from 1 to 3 μm.

Before starting the TiO_2 exposures in the subchronic study, BNW will assay the purity of the test material by assaying a known mass of TiO_2 for Ti using ICP-AES. Assay results will be used to determine the percent purity by mass of the test material. BNW will also analyze for elemental trace impurities in the test material using ICP-AES or ICP-MS. Test material identity will be established using x-ray powder diffraction analysis. These measurements will be performed only once.

(ii) Analysis of Exposure Concentrations. Concentrations of TiO_2 during exposures will be determined during exposures by collecting duplicate filter samples over the duration of the exposure. Duplicate filter samples will be collected on Teflon-laminated polypropylene filters (0.2-μm pore size) over the entire duration of the 6-hour exposure at a calibrated flow rate of ~0.5 L/minute using a critical orifice sampling device. The mass of TiO_2 on the filter will be determined gravimetrically. Exposure concentration (in milligrams/cubic meter) will be determined by dividing the mass of TiO_2 collected by the volume of air drawn through the filter.

BNW will also determine the purity of TiO_2 on the filters collected during exposure. Multi-element analysis of TiO_2 on filter samples from the exposure system will be performed by x-ray fluorescence (XRF) spectrometry.

2029227967

"Use or disclosure of proposal data is subject to the restriction on the Title page of this Proposal."

Source: https://www.industrydocuments.ucsf.edu/docs/hpxl0000

(iii) Analysis of Cascade Impactor Slides. The particle size distribution in the exposure atmosphere will be determined by collecting samples from the exposure system on a seven-stage, Mercer-style, cascade impactor (In-Tox Products, Albuquerque, NM). The mass of TiO_2 on each cascade impactor stage will be determined directly by XRF spectrometry. The relative mass of TiO_2 collected on each impactor stage will be analyzed by probit analysis (NEWCAS, Hill et al., 1977) to obtain the MMAD and the GSD for the aerosol. These measurements will be made once prior to the start of the subchronic toxicity study, and once during the subchronic and 2-year toxicity studies.

(3) Lung Burden Assay Methods.

(i) Tissue Sample Collection. The animals designated for the lung burden studies will be sacrificed at the appropriate times by inhalation of 70% CO_2 and exsanguinated via the brachial arteries. The lungs will be removed with the trachea and mainstem bronchi attached. Extraneous tissue will be trimmed, and the lobes severed from the mainstem bronchi, being careful to leave no lung tissue behind. Lung lobes will be placed in tared vials for weight determination and frozen at -20°C until analysis.

(ii) Lung Burden Assay by ICP-AES. Preweighed lung tissue samples (100 to 200 mg, wet weight) will be weighed into platinum crucibles, oven dried and ignited in air to remove organic material. Lung tissue residue will then be fused with soda borax (1:4 sodium metaborate:sodium carbonate) and the fusion dissolved in 2.5 M sulfuric acid with 1% hydrogen peroxide. The resulting solutions will be analyzed for Ti by ICP-AES using the Ti (II) emission at 334.9 nm. Results will be reported as micrograms of TiO_2 per gram of lung tissue.

(4) Reports. One month prior to the start of the subchronic subchronic study, BNW will submit a Prestart Report that will include a discussion of method validation for exposure methods, lung-clearance assays, and pulmonary tidal measurements. This report will also discuss the results of the preliminary study, and final recommendations for study design for lung-clearance studies during the subchronic subchronic study. A protocol for the lung-clearance study during the subchronic study will also be submitted with the Prestart Report. A report of the findings of the subchronic lung-clearance study will be submitted as an appendix to the Final Report for the RASS and DEE subchronic toxicity study. Prior to the start of the chronic study, BNW will submit a protocol for lung-clearance studies. The Final Report on lung-clearance studies will be included as an appendix to the Final Report on the chronic study.

7. Pathology

All the pathologists, supervisors, prosectors, and histopathology technicians who will work on this study have extensive experience in conducting necropsies of laboratory rodents from prechronic and chronic inhalation studies (see Section VIII, Qualifications of Personnel).

a. Necropsy. A complete necropsy, described in detail in the BNW necropsy SOP, will be performed on all exposed and control animals that die or are sacrificed during the subchronic and chronic studies. During the pilot study, mice that die or exhibit signs of stress at the end of the study will be necropsied to determine target organs and effects. The following are amplifications to the specifications of these documents:

(1) Terminal Sacrifice. All remaining core study animals alive after 13 weeks in the subchronic study and 104 weeks of exposure in the chronic study will be euthanized and necropsied, except five mice/sex/group in the subchronic study, which will be allowed to recover for 13 weeks before sacrifice. Necropsies at terminal sacrifice will be performed in random order.

2029227768

"Use or disclosure of proposal data is subject to the restriction on the Title page of this Proposal."

Source: https://www.industrydocuments.ucsf.edu/docs/hpxl0000

(2) Method of Euthanasia. Moribund and terminal sacrifice animals will be euthanized by exposure to ~70% CO_2 in a closed container until unconscious, followed by exsanguination by cutting the brachial artery. The necropsy will be initiated within 5 minutes after the animal is sacrificed.

(3) Verification of Animal Identification. Each animal's identification will be confirmed by checking the tail tattoo and comparing with the identification number on the necropsy tissue jar, lid, and Individual Animal Necropsy Record (IANR) form before starting each necropsy. The tail with tattoo will be placed in fixative at necropsy, and the identification number will be verified again by the histotechnician at trimming.

(4) Collection of Specific Organs at Necropsy. Tissues to be fixed are listed below:

Adrenals
Brain (medulla/pons, cerebellar cortex, cerebral cortex)
Caecum
Colon
Duodenum
Esophagus
Eyes
Femur (including joint)
Gallbladder
Harderian glands
Heart/aorta
Ileum
Jejunum
Kidneys
Liver
Lungs (including trachea, larynx, tongue, pharynx)
Lymph nodes
Mammary gland/skin
Nose
Oral Cavity
Ovaries
Pancreas
Pituitary
Preputial/clitoral glands
Prostate
Rectum
Salivary glands
Sciatic nerve
Seminal vesicles/coagulation glands
Spinal cord (cervical, thoracic, lumbar)
Spleen
Sternum with bone marrow
Stomach
Testes/epididymides
Thigh muscle
Thymus
Thyroid (including parathyroids)
Tissue masses/tumors
Urinary bladder
Uterus
Zymbal's gland

(5) Verification by Pathologist of Collection of Adequate Samples of all Required Tissues at Necropsy. Tissue samples taken at necropsy will be placed in fixative in a tray divided into compartments labeled with the names of the organs. After the prosector has completed the necropsy, the pathologist will examine the tissues to verify the collection of adequate samples of all required tissues.

(6) Fixation of Lungs by Intra-Airway Instillation with Fixative. To standardize the degree of distension of pulmonary alveoli with fixative, lungs will be fixed by inserting a blunt needle into the tracheal lumen and infusing ethanol/acetic acid/formaldehyde/saline (EAFS) fixative at a pressure of 25 cm of water until the flow of fixative stops due to equalization of pressures. The trachea is then ligated to prevent outflow of fixative from the lungs. The pathologist will examine the infused lungs for gross lesions, then immerse the lungs in fixative.

(7) Fixation of Nasal Cavity Structures. The nasal mucosa has been shown by a number of studies at BNW to be a sensitive target tissue for rodents exposed to many test materials by inhalation. Thus, it is very important to fix these tissues adequately as soon as possible after sacrifice. This will be done by inserting a blunt needle into the pharyngeal duct from the nasopharyngeal opening and

2029227769

"Use or disclosure of proposal data is subject to the restriction on the Title page of this Proposal."

Source: https://www.industrydocuments.ucsf.edu/docs/hpxl0000

flushing EAFS fixative into the nasal cavity until fixative is observed coming out both external nares, then immersing the entire skull in fixative.

(8) Photographs of Gross Lesions Observed at Necropsy. Color 35-mm photographs will be prepared of representative gross lesions from target tissues or unusual gross lesions observed at necropsy or trimming. These will be identified and submitted to the Sponsor as 2" x 2" slides with the other pathology data.

(9) Provisions for Moribund Sacrifices and Necropsies on Weekends and Holidays. Trained animal resource technicians observe the animals twice a day on weekends and holidays, once in the morning and once in the evening. Animals found dead or determined to be moribund are removed from the study room and the necropsy technician on call is notified. Fixed tissues are reviewed by, and questions or problems arising during necropsy are discussed with, one of the four BNW pathologists, either at the time of necropsy or the following work day, depending on individual circumstances. If an animal is judged at any time to be moribund, the animal resource technician must obtain specific approval from one of the designated toxicology professionals before removing the animal from the study room.

b. Trimming and Slide Preparation. Trimming and slide preparation procedures will be performed as specified in the BNW SOP for trimming tissues. The following are amplifications of the specifications of these documents:

(1) Tissues Required for Histology and Histopathology in the Subchronic and Chronic Studies. The following tissues will be trimmed, processed, stained with H&E, and examined microscopically from all animals in the highest concentration group, the filtered-air controls, the positive controls, and all early deaths in the subchronic and chronic studies:

Accessory genital organs (prostate, seminal vesicles, coagulation glands)
Adrenals, right and left
Aorta (thoracic)
Brain (cerebral cortex, cerebellar cortex, pons/medulla oblongata)
Caecum
Clitoral glands
Colon
Duodenum
Epididymis
Eyes with optic nerve (if grossly abnormal)
Femur, including joint
Harderian glands
Heart
Ileum
Jejunum
Kidney, right and left
Larynx/laryngopharynx (step sections, 4 levels, laryngopharynx at the base of epiglottis)
Liver, gallbladder
Lungs (6-μm sections every 5 mm)
Lymph nodes (mandibular, mesenteric, bronchial and mediastinal)
Mammary glands
Musculature (thigh)
Nose/nasopharynx (4 levels; Young, 1981)
Oral cavity
Ovaries (mesovaries), right and left
Pancreas
Parathyroid glands
Peripheral nerve (sciatic)
Pituitary gland
Preputial glands
Rectum
Salivary glands (submandibular and sublingual)
Skin
Spinal cord (cervical, thoracic, and lumbar)
Spleen
Sternum with bone marrow
Stomach (forestomach and glandular stomach)
Testes, right and left
Thymus
Thyroid glands
Tongue
Trachea
Urinary bladder
Uterus
Zymbal's glands
All grossly visible tumors or lesions suspected being tumors

2029227770

"Use or disclosure of proposal data is subject to the restriction on the Title page of this Proposal."

Source: https://www.industrydocuments.ucsf.edu/docs/hpxl0000

The following tissues from the lower concentration groups will be trimmed, processed, stained with H&E, and examined microscopically in the subchronic and chronic studies:

Larynx/pharynx (4 sections)
Lungs (6-μm transverse sections every 5 mm)
Tracheobronchial lymph nodes
Nose/nasopharynx (4 sections)
Trachea (2 sections)
All grossly visible tumors or lesions suspected of being tumors
Target tissues to no-effect-level

Duplicate sections of lungs, trachea, and nose will be cut, stained with Alcian Blue/PAS, and evaluated for mucus/goblet cell hypertrophy/hyperplasia.

(2) Verification of Collection and Submission of Adequate Samples of Protocol-Required Tissues and Gross Lesions at Trimming, Slide Preparation, and Microscopic Examination. Several checkpoints are utilized in our histology laboratory and histopathology procedures to confirm trimming, embedding, microtoming, staining, and microscopic examination of protocol-required tissues and gross lesions from toxicology studies. At tissue trimming, the histotechnician indicates any abnormal tissues, and any missing or insufficient quantity of protocol-required tissues on the IANR for each animal. The technician also completes the "trim" portion of a BNW Histology Record form for each animal. This form, when completed, indicates the number of the block into which each tissue section was trimmed and the number of samples of each tissue trimmed. Similar information is entered for each animal by the histotechnician at embedding, microtoming, and tissue checkout. Before submitting slides to the pathologist, the histology supervisor or senior technician: 1) obtains the IANR form and verifies all gross lesions mentioned have been trimmed and microtomed; 2) does a slide block match up with slides 2, 5, and 7 (approximately 30% of the animal); 3) grossly examines slides for lifted up tissues and folds; 4) microscopically examines all slides for chatter and artifacts, especially all respiratory tract tissues, paying attention that the epithelial lining is complete and includes the lumen of the larynx, the cross-section and longitudinal section of trachea, and the turbinates; 5) microscopically examines the parathyroid, tracheobronchial lymph nodes and mediastinal lymph nodes and the gallbladder; and 6) after all are completed, signs off the Histology Record form with the number of slides, date checked out and initials. One copy of the Histology Record form for each animal is submitted with the IANR form and the slides to the pathologist. The pathologist indicates, at microscopic examination, each tissue examined using the Xybion Path/Tox histopathology data collection system.

In the proposed study, we will utilize the Xybion Path/Tox system to collect and tabulate histopathology data. Thus, the pathologist, histology laboratory personnel, and internal QA personnel can utilize the complete IANRs, the BNW Histology Record forms, and the computerized histopathology data files, as well as the raw data (wet tissue, blocks, and slides) to keep track of tissues trimmed, processed, and examined microscopically.

c. Special Considerations for Trimming Tissues

(1) Trimming and Slide Preparation of Laryngeal Sections. The epithelium covering the surface of the base of the epiglottis has been found to be one of the more sensitive areas to exposure-induced lesions in inhalation toxicity studies. Consistency in epiglottis sections is a key factor in the ability to detect subtle changes. We have developed a technique to obtain consistently high-quality transverse sections through: a) the base of the epiglottis in the area in which transition from stratified squamous epithelium to cuboidal/columnar ciliated epithelium normally takes place in rodents; b) the anterior ventral pouch just caudal to the base of the epiglottis; and (c) the area of the vocal folds (Renne et al., 1992a). This has allowed us to detect subtle changes in the normal anatomic features of these sensitive regions, such as squamous metaplasia, hyperplasia, necrosis, and inflammation.

2029227771

"Use or disclosure of proposal data is subject to the restriction on the Title page of this Proposal."

Source: https://www.industrydocuments.ucsf.edu/docs/hpxl0000

(2) Trimming and Slide Preparation of Nasal Sections. The olfactory and respiratory epithelia lining the nasal cavity in rodents have been shown by studies at BNW to be sensitive target tissues to many inhaled materials. Thus, preparation of consistently high-quality sections of nasal cavity structures will be a key factor in the detection and interpretation of early degenerative, metaplastic, and proliferative changes, as well as neoplastic lesions. Our experience in histologic preparation of nasal tissues will enable us to provide these critical tissue sections consistently. We will utilize the method of Young (1981) for trimming and microtoming nose sections.

(3) Histology of Lungs. We will trim and prepare sections from the lungs as described in the method of Lamb and Reid (1969) for trimming rat lungs. However, since mice have much smaller lungs than rats, it will be more difficult to consistently obtain single sections containing the junctions of all major branches with the mainstem bronchus of the left lung. We anticipate some variation in the number of mice per group in which sections of left lung contain all major branches of the mainstem bronchus.

d. Histopathology. Histopathology procedures will be performed as specified in the BNW SOP entitled *Histopathology*. The following are amplifications to the specifications of this document:

(1) Use of Xybion Path/Tox Histopathology Data Collection System. The Xybion Path/Tox computer system is used in our facility to collect and tabulate histopathology data for ongoing chronic studies. Data collection terminals for this system are located in each pathologist's office.

(2) Avoiding Spurious Trends in Histopathology Data. Apparent differences in the incidence of microscopic lesions among groups, which on reexamination (by the original pathologist or by a QA pathologist) are later determined not to actually be present, create a problem in toxicology studies involving microscopic examination of large numbers of tissues. Several techniques, described below, will be utilized to avoid this problem in the microscopic examination of tissues from the proposed studies.

- The pathologist will keep a dictionary of diagnostic terms used to describe microscopic lesions observed, and will minimize the number of diagnostic descriptors used. When a pathologist determines that a new morphologic descriptive term is necessary, and this term has some similarity to another term already in use, he or she will note the specific morphologic differences between the two terms and the reasons for introducing the new term in the narrative portion of the microscopic data for the first animal in which the new term is used. If the incidence of the two lesions creates potential confusion in interpretation of the data, the pathologist will briefly describe the differences in the study report.

- The pathologist will use descriptive adjectives only when necessary to differentiate similar lesions and will avoid using several descriptive adjectives for the same lesion unless absolutely necessary to differentiate induced from spontaneous lesions. When this is required, the pathologist will briefly point out the differences in the study report.

- After completing the initial microscopic examination of tissues from control and high-dose animals, the pathologist will examine the data for differences between groups. If differences in incidence and/or severity are apparent, the pathologist will then reevaluate the tissues containing these lesions from both groups in a "blind" fashion, i.e., informally randomized order without knowing the group of origin of any slide examined. This same reevaluation procedure will be done with apparent differences in the incidence of lesions in target organs examined microscopically from lower-dose groups. Reevaluation of all apparently exposure-induced lesions will be carried out before submitting the study report.

(3) Morphometry of Laryngeal Epithelium. We will measure and record the thickness of surface epithelium at several sites in the larynges of all basic study mice in which we do routine

2029227272

"Use or disclosure of proposal data is subject to the restriction on the Title page of this Proposal."

Source: https://www.industrydocuments.ucsf.edu/docs/hpxl0000

histopathology, using the Bioscan Optimas image analysis system (Bioscan, Inc.; Edmonds, WA). Specific areas to be measured will depend somewhat on results of microscopic examination of H&E-stained sections, and will be determined after microscopic examination of tissues and discussion with Sponsor personnel. Tentatively, we propose to measure the distance from the luminal surface to the basement membrane of the surface laryngeal epithelium at the following points:

- Base of epiglottis, in area overlying seromucous glands (Renne et al., 1992a); measurements at midsagittal point, and on either side halfway between midsagittal point and lateral edge of flat surface (total of three measurements per animal)
- Median arytenoids, using the most anterior section in which both arytenoid processes are present (Renne et al., 1992a); measure both right and left arytenoids, at a point halfway between ventral tip and most dorsal extension of medial surface (total of two measurements per animal)
- Ventral pouch; one measurement at the most ventral aspect
- Vocal folds; one measurement of the epithelium covering medial surface of each vocal fold, at the base of the fold (two measurements per animal).

We will compare the data from each of these points among exposed and control groups and analyze these data for statistical significance.

(4) Evaluation of Goblet Cell Populations in Respiratory Tract. We will prepare duplicate sections of nasal section II (at level of incisive papilla), a longitudinal section of trachea, and a longitudinal section of the left lung from all mice in subchronic and chronic studies, and stain these slides with Alcian Blue/PAS to evaluate goblet cell numbers in these tissues. We propose, as an alternate method to counting numbers of goblet cells per high power field as described in the method of Lamb and Reid (1969), to utilize the unit length method of Monticello et al. (1990), which expresses number of cells present as per millimeter of basement membrane. This method provides a more accurate measurement of area evaluated.

(5) Proposed Cell Proliferation Assays of Respiratory Tract Tissues. In addition to standard histopathologic examination of respiratory tract tissues using H&E-stained sections, the protocol provided by the Sponsor calls for morphometric examination of laryngeal epithelia at several sites, as well as examination of Alcian Blue/PAS-stained sections of respiratory tract to evaluate goblet cell populations. We propose to perform additional assays on respiratory tract tissues to evaluate epithelial cell replication rates in nose, larynx, and lung tissues of exposed and control mice. To accomplish this, we propose to utilize a technique already established in our laboratory (Renne et al., 1992b), in which nuclei of replicating cells are labeled immunohistochemically using a commercially available monoclonal antibody (PC 10; DAKO, Inc.; Carpinteria, CA) to PCNA, an endogenous nuclear protein.

PCNA is an auxiliary protein of DNA polymerase delta, an enzyme required for DNA replication. PCNA is expressed differentially during the cell cycle, and its rate of synthesis is correlated directly with the proliferative rate of cells (Cells et al., 1984). Good correlation has been demonstrated between labeling of cells with antibodies to PCNA and incorporation of tritiated thymidine or labeling with bromodeoxyuridine (BrDU) in a number of different normal tissues, tumors, and non-neoplastic proliferating cells (Hall and Woods, 1990). Use of an endogenous indicator such as PCNA has a distinct advantage over injection of exogenous labels because it provides the capability of measuring cell replication rates in routinely fixed tissues, and avoids potential problems related to injection of exogenous labeling compounds.

Use of this assay will allow us to compare cell turnover rates in mucosal epithelium of respiratory tract of exposed and control mice sacrificed for histopathology. We propose to cut additional sections of

2029227773

"Use or disclosure of proposal data is subject to the restriction on the Title page of this Proposal."

Source: https://www.industrydocuments.ucsf.edu/docs/hpxl0000

nose, larynx, and lungs at histology, and compare mucosal epithelial cell replication rates in these tissues by labeling nuclei with the PC 10 monoclonal antibody, counterstaining with hematoxylin, counting labeled nuclei in selected areas of the nose, larynx, and lungs, and comparing the labeling index of these tissues in exposed and control animals. For measuring labeling rates in the nose and larynx sections, we will utilize the unit length labeling index method of Monticello et al. (1990); for measuring labeling rates in lung, we will record the number of labeled alveolar epithelial nuclei in a total of 1000 nuclei examined.

Location of specific areas within the nose, larynx, and lung to be evaluated will depend somewhat on the results of microscopic examination of H&E-stained sections, and will be selected in discussions with the Sponsor after completing the microscopic examination of H&E-stained sections of respiratory tract.

BNW SOPs titled *Handling Slides*; *Cleaning, Screening, and Labeling Slides*; and *Shipping Slides* address storage of slides on site and final inventory, packing, and shipping pathology materials to the Sponsor.

(6) Photomicrographs of Representative Microscopic Lesions from Target Tissues. Color prints of photomicrographs of representative microscopic lesions induced in target tissues by exposure to the test materials will be prepared and submitted to the Sponsor as part of the Final Report.

8. Hematology

Hematologic evaluations will be conducted on 15 mice/sex/group randomly selected at terminal sacrifice for the chronic study. The animals will be lightly anesthetized with ~70% CO_2 in room air and blood samples collected into tubes containing potassium ethylenediaminetetraacetate (K-EDTA) via the supra-orbital sinus. In addition, blood smears will be made on all surviving mice for leukocyte differential evaluations, which will be evaluated if considered appropriate after evaluating the hematologic results from the 15 mice/sex/group. Hematologic parameters evaluated will include an erythrocyte count (red blood cells; RBC), hemoglobin (Hb) concentration, volume of packed red cells (VPRC), mean corpuscular volume (MCV), mean corpuscular hemoglobin (MCH), mean corpuscular hemoglobin concentration (MCHC), leukocyte count (white blood cells; WBC), leukocyte differential count, platelet count, and cytologic assessment of all formed elements.

An Ortho ELT-8/ds blood analyzer will be used to perform the RBC and WBC counts, platelet counts, Hb, and VPRC determinations, and the red cell indices. For leukocyte differential counts, smears will be made from a well-mixed aliquot of blood using a blood film centrifuge and stained with Wright-Giemsa stain in a Wescor 7100 aerospray slide stainer. The percentage of the various leukocyte types will be determined in a minimum of 100 leukocytes and these percents converted to absolute values. All leukocyte counts will be corrected to delete nucleated erythrocytes, which will be reported independently. While performing the leukocyte differential count, the cytologic features of the erythrocytes, leukocytes, and platelets will be evaluated, as will the presence or absence of erythrocyte inclusions such as Howell-Jolly bodies. In the event that an erythrocyte count is low compared to the control group, an estimated leukocyte count will be made from the smear and compared to the instrument count.

9. Carboxyhemoglobin (COHb) Measurements

Since the COHb content of the blood is a reflection of CO dose, CO can serve as a marker for relating levels of constituents in the exposure vapor to actual dose to the subject. A variety of analytical methods are available for measuring COHb as well as CO.

BNW currently uses an IL 282 CO-Oximeter (Instrumentation Laboratories, Lexington, MA) to determine percentage of COHb in blood collected from rats and hamsters. Previous limited investigations have indicated accurate analyses in mouse blood for COHb can be obtained with the CO-Oximeter by using calculation coefficients available for rats. BNW will validate the CO-Oximeter measurements during the pilot

2029227774

"Use or disclosure of proposal data is subject to the restriction on the Title page of this Proposal."

Source: https://www.industrydocuments.ucsf.edu/docs/hpxl0000

study. Blood samples will be collected from a limited number of animals from the filtered-air control exposure group, as well as from those exposed to 1 and 10 mg/m^3 RASS, and 10 mg/m^3 DEE. These samples will be split and analyzed using both the CO-Oximeter and chemical-specific techniques. The chemical-specific analysis will utilize gas chromatography (GC)/MS for the determination of CO after liberation from the hemoglobin. If the CO-Oximeter results agree well with the chemical-specific analyses, the CO-Oximeter will be used for COHb analyses for the chronic study. If the two methods disagree, a decision on analysis methods will be based on the results of the validation study.

A potential problem with the CO-Oximeter analysis method is that sulfhemoglobin can cause an interfering response, giving rise to inaccurate results for COHb determinations. This could be a concern with the DEE studies, given the levels of sulfur present.

a. Sampling

(1) Animal Exposure. BNW will use a limited number of animals between 6 and 12 weeks of age for assay validation. After the generation systems have been constructed and validated, and the strain of mouse has been selected, animals will be exposed to the filtered-air control, 1- and 10-mg/m^3 RASS, and the 10-mg/m^3 DEE atmospheres for 6 hours for the COHb validation study.

(2) Sample Collection Techniques. Blood samples will be collected immediately after animal exposure. The animals will be lightly anesthetized with ~70% CO_2 and blood samples obtained from the supra-orbital sinus. Samples will be collected in tubes containing heparin as an anticoagulant. After thorough mixing, a portion of the sample will be removed for chemical-specific measurement. The remaining material will be available for CO-Oximeter analysis.

b. Analytical Methodology

(1) IL-282 Spectrophotometric COHb Determinations. A whole-blood sample is aspirated into the spectrophotometer, mixed with diluent, hemolyzed, and brought to a constant temperature in a detector cuvette. Light absorbance in the sample is measured at four specific wavelengths from which total hemoglobin is determined and the percent oxyhemoglobin, percent carboxyhemoglobin, percent methemoglobin and oxygen content are calculated.

(2) GC/MS for analysis of Carbon Monoxide. An aliquot of the collected blood sample will be used for chemical-specific determinations of CO. The sample will be placed in a 10-ml headspace vial and weighed. To liberate the CO, an acidic reagent will be added through the septum of the vial. In addition, an isotopically labeled CO standard will be added with a gas-tight syringe. The isotopically labeled internal standard will make it possible to account for difference in partition coefficient due to matrix variation. The internal standard will also provide the ability for volumetric, transfer, and detection variabilities.

Samples will be analyzed by GC/MS using an HP-5971 mass selective detector (MSD) operated in the selected ion monitoring mode. Headspace will be introduced to the gas chromatograph using an automated headspace sampler. A porous layer, open tubular, capillary column coated with molecular sieve material will be used for chromatographic separation. The GC/MS will be calibrated using volumetrically prepared samples of CO.

For the chemical-specific measurements, percent COHb will be calculated from the CO results from the GC/MS determinations and the total hemoglobin results from the CO-Oximeter. For total hemoglobin, the CO-Oximeter utilizes a cyanmethemoglobin method that is not species-dependent.

(3) Choice of Sample Analysis Methodology. The results for COHb from the spectrophotometric and chemical-specific techniques will be compared for samples from the RASS and DEE exposure. If there is good agreement between the two methods, the CO-Oximeter will be used for subse-

2029227715

"Use or disclosure of proposal data is subject to the restriction on the Title page of this Proposal."

Source: https://www.industrydocuments.ucsf.edu/docs/hpxl0000

quent determinations during the chronic study. In the case of a consistent bias between the two methods, the CO-Oximeter results will be corrected for the bias. Although unlikely, if a discrepancy is such that a simple bias correction cannot be validated, then the chemical-specific measurement method will be used. If such a discrepancy occurs for only diesel exhaust, then interference from sulfur may be the cause and the chemical-specific assay will be used for these samples.

10. Proposed Protein/DNA Adducts Study

Room-aged sidestream smoke contains many of the same compounds present in mainstream smoke, including PAHs, tobacco-specific nitrosamines, 4-aminobiphenyl, and other constituents (Dube and Green, 1982). The potential contributions to tumor development and other health problems need to be evaluated and one method that has received considerable attention is the formation of adducts to proteins and DNA. We propose to assay selected tissues from mice in the subchronic study for the presence of the adducts.

This type of work is based on the assumption that cigarette-smoke-induced tumors result from the production (during tobacco pyrolysis) of reactive intermediate compounds that covalently bind to DNA. These DNA modifications result in mutations, the initial step in tumor formation. Thus, adducted DNA is the most reliable biopolymer to analyze since it is the target molecule. While it follows that the total binding of carcinogen to DNA may be quantitatively related to the number of tumors observed, there is poor correlation when several carcinogens are compared. This will be important when samples from animals exposed to RASS are evaluated, because cigarette smoke contains numerous suspected carcinogens.

A purpose of the proposed study is to compare the relative potencies of sidestream smoke and diesel exhaust for the induction of adducts to proteins and DNA. This comparison is complicated since both materials result in exposure to a complex mixture of carcinogens. In addition, the chemical compositions of the two materials are different. Nevertheless, it will be possible to compare adduct levels for selected compounds because of advances in MS, improved derivatization procedures, and sample handling methods.

Several methods for analyzing DNA adducts have been developed. We propose to evaluate urine samples for modified nucleobases. Urine samples will be collected from exposed and control mice after several weeks of exposure, derivatized, and analyzed by established separation and mass spectrometric methods (Hecht et al., 1993; Shuker and Farmer, 1992). These analyses will determine whether the adducts are present and provide dosimetric information for a variety of DNA adduct species, provided that adequate concentrations are produced. The most likely adducts with adequate concentrations for analysis, are PAHs, aromatic amines and tobacco-specific nitrosamines; however, the method is also very sensitive for altered bases resulting from alkylation or oxidative damage.

Although formation of adducts to proteins such as hemoglobin and albumin are not involved in the carcinogenesis process, they may act as surrogate molecules for carcinogen binding, and therefore act as internal dosimeters. This approach has been used recently to obtain information for occupational exposure to ethylene oxide and for cigarette smoke by measuring tobacco-specific nitrosamines. We propose to conduct similar studies. For example, exposure of animals to the tobacco-specific nitrosamines, 4-(methylnitrosamino)-1-(3-pyridyl)-1-butanone (NNK) or N'-nitrosonornicotine (NNN) results in adducts to hemoglobin. Incubation of these hemoglobin samples under mildly basic conditions results in hydrolysis of the adduct and release of 4-hydroxy-1-(3-pyridyl)-1-butanone (HPB). Similarly, acid hydrolysis of benzo[a]pyrene diolepoxide releases a tetrol that can also be derivatized and analyzed by GC/MS (Shugart, 1986). It has also been demonstrated that 4-aminobiphenyl, a component of cigarette smoke, forms adducts with hemoglobin at concentrations that provide dosimetric information upon analysis. We plan to compare RASS and DEE by analyzing for the compounds described above.

The experimental design for the proposed study will be as follows: Urine from five animals/sex/exposure group will be collected over a 24-hour period after 4 weeks of exposure. Blood will be collected,

2029227776

"Use or disclosure of proposal data is subject to the restriction on the Title page of this Proposal."

Source: https://www.industrydocuments.ucsf.edu/docs/hpxl0000

the mice will be sacrificed, and the lungs and trachea will be collected and frozen at -80°C. Urine samples will be analyzed for DNA adduct metabolites; blood will be analyzed for hemoglobin adducts.

The determination of DNA or protein adducts as markers of exposure requires the use of very sensitive analytical techniques. Generally, the use of such biomarkers is hampered by inadequate sensitivity or specificity of the analytical instrumentation. However, the prospects are encouraging for achieving better sensitivity and specificity by the application of tandem MS in conjunction with either HPLC (HPLC/MS/MS) or GC (GC/MS/MS). In both instances, the use of reactant ion monitoring can often allow discrimination against materials that would have presented serious interferences to GC/MS or HPLC/MS. Furthermore, the application of either of the electrospray ionization or atmospheric pressure ionization interfaces for HPLC promises to transform HPLC/MS or HPLC/MS/MS into a practical, highly sensitive, analytical technique.

These advances in analytical instrumentation are just now finding widespread practical application and BNW is currently in the preliminary planning stages to implement such instrumentation in the Toxicology Department, where it would be used for analyzing adduct samples. If these plans are not completed, similar capability is available elsewhere within BNW. However, even with the application of such advanced techniques, the levels of adducts formed by exposure to RASS may be so low as to evade reliable measurement. If such is the case, the adduct studies would not be pursued beyond the subchronic study. However, BNW would carefully define the lower limit of quantitation of the measurement methods so that an upper bound could be established for the particular adduct(s) under study.

11. Proposed Enzyme Activity Assays

We propose to look at two of the key enzymes of metabolism; the cytochrome P-450 monooxygenase system, a Phase I enzyme, and GST, a Phase II enzyme. The cytochrome P-450 monooxygenase system consists of multiple isozymes and is one of the most important and ubiquitous of broad and nonspecific enzyme systems. Various xenobiotics have been shown to cause marked induction, up to 50- to 100-fold (Parkinson and Safe, 1987), in one or more of these isozymes. The PAHs, such as 3-methylcholanthrene, and phenobarbital are classic inducers of P-450 activity. Tobacco smoke contains over 4000 compounds, including numerous PAHs (Dube and Green, 1982).

The GST family of enzymes has received considerable attention in the last few years. These enzymes, which are present in most tissues, catalyze reactions between electrophiles and glutathione. A number of endogenous compounds including quinones, organic hydroperoxides, epoxides, alkenes and arachidonic acid are thought to be substrates for GST. The involvement of these enzymes in detoxification of carcinogens has received considerable attention since the carcinogens are eliminated by conjugation with glutathione and secretion in the bile. The involvement of this enzyme family in carcinogenesis is supported by other information. For example, increased levels of GST in tumor tissue may contribute to resistance to chemotherapeutic agents. Because of the involvement of GST in Phase II detoxification of carcinogens, it is important to evaluate these enzymes along with cytochrome P-450 activity measurements. These studies may determine the relative importance of metabolic activation and conjugation for carcinogens present in RASS.

Six mice/sex/group will be exposed for 4 weeks to RASS, DEE, or filtered air as part of the subchronic study. The mice will be sacrificed and the microsomal and cytosolic subcellular fractions from liver, lung, and kidney tissue will be prepared using differential centrifugation techniques (Guengerich, 1989; Van der Hoeven and Coon, 1974). Protein determinations will be made on these preparations using the technique of Lowery (Lowery et al., 1951) or the bicinchoninic acid method using the manufacturer's methods (Pierce, Rockford, IL). The microsomal fraction will be assayed for P-450 content (Matsubara et al., 1976; Omura and Sato, 1964). Two alkoxyresorufin enzyme assays will be used to assay for specific isozymes of P-450 (Burke et al., 1985; Lubert et al., 1985; Rutten et al., 1992). Ethoxyresorufin dealkylase activity appears to be mediated primarily by the IA1 and IA2 forms of cytochrome P-450 and is preferentially induced by PAHs. Pentoxyresorufin dealkylase activity appears to be mediated primarily by the IIB isozyme of

2029227777

"Use or disclosure of proposal data is subject to the restriction on the Title page of this Proposal."

Source: https://www.industrydocuments.ucsf.edu/docs/hpxl0000

cytochrome P-450 and is preferentially induced by phenobarbital. The dealkylation of these alkoxyresorufins results in a fluorescent product. The GST activity in the soluble fraction will be determined using 1-chloro-2,4-dinitrobenzene as the substrate. All three soluble classes of mouse GST have activity for this substrate. If RASS-induced changes in GST or P-450 activity are observed, the individual isoforms will be quantitated using Western blots and immunochemical procedures. Measurement of the increase in total P-450 or GST activity and, more specifically, the immunochemical identification of the specific isozyme involved can provide information on the potential mechanism of action of a xenobiotic.

12. Proposed Studies to Evaluate the *In Vivo* Genotoxic Effects of RASS and Diesel Exhaust on the Mouse Lung Cells

a. Proposed Micronuclei Study. Chromosome breakage and rearrangement, which may result in the formation of micronuclei, is one of the critical classes of change observed during the multistage progression of normal cells to cancer cells. Deep lung fibroblasts have been used to detect micronuclei induced by chemicals and radiation. To characterize this system, animals were exposed to radiation or chemicals (Heddle et al., 1990; Khan and Heddle, 1991, 1992) and the frequency of mutations or micronuclei was determined in lung fibroblasts. The chemical was given by injection; radiation was delivered either as external x-ray exposures or as inhaled radon and its progeny (Khan et al., in press). Studies were conducted in rats, mice, and Chinese hamsters and have validated the use of this end point and cell system for physical and chemical agents. This system is very sensitive and can detect damage from low levels of insult. For radiation exposure, dose-response relationships were linear. Damaged cells remained in the lung cell population with an effective half-life of about 30 days, which suggested a very slow tissue repair and made it possible to use the system as an integrator of chronic damage. Cells can be exposed for many days and the number of damaged cells will increase with increased exposure time. Such a system is very useful for conducting studies of chronic exposure of laboratory animals to environmental agents.

We propose to use transgenic mice for these studies so both clastogenic and mutagenic events can be measured in the same animal. We will use the same strain of Big Blue mouse (either the C57Bl/6 or the B6C3F1) selected for the subchronic and chronic study of RASS. The Big Blue mouse was selected for these studies on the basis of a rapidly developing data base indicating that these mice are very useful in determining the frequency of induced mutations, as well as their molecular nature.

Ten 6-week-old mice/sex/group will be exposed to either 1 or 10 mg/m^3 of RASS, to 3 or 10 mg/m^3 of DEE, or to filtered air for approximately 4 weeks as part of the subchronic study. The mice will be sacrificed following at least 2 consecutive days of exposure and the lungs will be removed aseptically. One half of each lung will be used for the micronucleus assay. The remainder will be used for the Big Blue mutagenesis assay.

The cell isolation procedure is a modification of Kahn and Heddle (1991). Briefly, the animals will be anesthetized with pentobarbital and the thoracic cavity will be opened aseptically. The lungs will be perfused with Hank's balanced buffered salt (HBBS) solution via the right ventricle of the heart. The lungs will then be removed and minced (<1-mm^3 pieces). After degassing under vacuum to remove trapped air, the tissues will be rinsed with HBBS to remove any remaining blood. The tissues will be digested in 0.25% trypsin in HBBS for 80 minutes at 37 ± 0.5°C, with agitation during the final 50 minutes of the digestion. The digestion will be stopped with the addition of RPMI medium and the debris will be allowed to settle. The supernatant will be decanted and centrifuged at 1200 rpm for 5 to 6 minutes. The pellet containing the cells will be resuspended in RPMI containing 13% fetal bovine serum and 50 μg/ml gentamicin (complete medium) and plated in single-chambered slides (Permanox; Nunc, Inc.; Naperville, IL).

The cultures will be incubated overnight at 37.5°C, 5% CO_2, and 95% relative humidity (RH). The medium will be discarded the following day to remove unattached cells and any remaining debris. The cultures will then be incubated for ~60 to 72 hours with complete medium containing 3.2 μg cyto-

2029227778

"Use or disclosure of proposal data is subject to the restriction on the Title page of this Proposal."

Source: https://www.industrydocuments.ucsf.edu/docs/hpxl0000

chalasin B/ml under the same conditions. The incubation will be stopped with the addition of a hypotonic solution of 0.075 M KCl and fixed with 95% methanol.

The slides will be stained with 0.01% acridine orange stain (Difco; Detroit, MI), which stains nuclear material, and scored according to the criteria of Heddle et al. (1990). The number of binucleated cells (those undergoing one cycle of cell division while in the culture media) will be recorded relative to the number of undivided cells. This will provide a measure of the rate of cell proliferation during the cell culture period and determine if the exposure caused changes in the cell cycle. The frequency of micronuclei in binucleated cells will be recorded to provide an index of chromosome damage in the cells undergoing cell division.

b. Proposed Big Blue™ Mouse Mutation Assay. Stratagene has developed strains of mice containing the lambda bacteriophage shuttle vector (Big Blue mouse). These vectors contain a *lacI* target gene that codes for a repressor of an indicator gene. The DNA of individual tissues is extracted and the phage sequences are packaged into active phage particles. When bacteria are infected with these phage and are spread onto a culture plate, they grow as a lawn of noninfected bacteria containing plaques (zones of clearing) consisting of bacteria lysed by a phage clone. Mutations that inactivate the *lacI* gene allow synthesis of β-galactosidase by infected bacteria that generates a blue color from a chromogenic substrate. Thus, blue plaques of lysed bacteria each contain a phage clone with a mutated *lacI* gene. The assay allows the measurement of mutation frequency by comparing the relative numbers of blue and normal plaques. Further, the phage from blue plaques can be amplified by growth and the DNA sequences of the mutants can be analyzed to provide a spectrum of mutations.

We propose using the Stratagene Big Blue mouse system to analyze the mutagenicity of DEE and RASS by inhalation exposure. Methods for analyzing the mutations will be those in the instruction manual provided by Stratagene. We plan to expose 10 Big Blue mice/sex/group to DEE or RASS for 4 weeks and compare these to a group of 10 Big Blue mice/sex nonexposed controls. We will extract and process the DNA from trachea, lung, and liver and analyze 400,000 plaques from each tissue for mutations. Stratagene's work to characterize the system showed that mutation frequencies were constant after more than 300,000 plaques. If the mutation frequency of the DEE-exposed group is higher than the controls, we will analyze them by DNA sequence analysis to characterize their mutations. Blue plaques will be grown in liquid culture, isolated, and the *lacI* gene sequenced by cycle sequencing using an Applied Biosystems, Inc. (ABI; Model 373A; Foster City, CA) automated sequencer. In this method, the gene is amplified in three overlapping segments by the polymerase chain reaction and the one containing the mutation is identified by single-strand conformational analysis. Thus, only one 300-base pair (bp) fragment will need to be sequenced. Sequencing directly from the phage DNA will use the protocol developed by ABI for their automated sequencer.

2022922779

"Use or disclosure of proposal data is subject to the restriction on the Title page of this Proposal."

Source: https://www.industrydocuments.ucsf.edu/docs/hpxl0000

Source: https://www.industrydocuments.ucsf.edu/docs/hpxl0000

2029227780

IV. GENERATION AND MONITORING

A. TEST MATERIAL

1. Cigarettes

a. Specification. The test cigarette to be used to generate RASS is 1R4F, as specified by the Sponsor. The 1R4F is a filter-tipped, reference cigarette with a TPM delivery of 16.9 mg/cigarette in sidestream smoke (RJ Reynolds, 1988).

b. Procurement. It is assumed that the test cigarettes will be provided by the Sponsor and are not included in the cost estimate of this proposal. They are also available from the Tobacco and Health Research Institute at the University of Kentucky (Lexington, KY). As delivered by this institute, the cigarettes are packed to contain 5,000 per case. BNW estimates that ~900 cigarettes/day will be required and ~634,000 cigarettes will be required to complete the prestart testing, and the subchronic and chronic exposures. A 13-week supply of cigarettes (~60,000) will be ordered each quarter. The capacity of BNW's freezer is sufficient to allow storage of 85,000 cigarettes between shipments.

c. Analysis. The composition and physical data on 1R4F cigarettes are summarized in Tables IV-1 and IV-2. It is expected that some physical and chemical analysis will also be provided by the Sponsor or the supplier of the test cigarettes. BNW does not plan any additional analytical measurements or tests before using these cigarettes for RASS generation.

TABLE IV-1. Composition of the 1R4F Reference Cigarette (Sullivan, 1984)

Tobacco Type	Percent Composition
Flue-cured	32.54
Burley	20.04
Oriental	11.09
Maryland	1.06
Reconstituted (Schweitzer)	27.17
Glycerol	2.80
Isosweet (sugar)	5.30

TABLE IV-2. Physical Data for the 1R4F Reference Cigarette (Sullivan, 1984)

Cigarette Rod Weight (gm)	Static Burn (sec/40 mm)	Length (mm)	Circumference (mm)	Paper Porosity (sec/50 cc)
1.072	552	84.0	25.0	22.0

2029227781

"Use or disclosure of proposal data is subject to the restriction on the Title page of this Proposal."

Source: https://www.industrydocuments.ucsf.edu/docs/hpxl0000

d. Storage and Inventory Control. Before signing a Confirmation of Receipt form, each case of cigarettes will be inspected and the cartons will be counted. Each carton of cigarettes will be given a unique identification number, which will be used to track the test material from receipt through usage.

The cigarettes will be stored in a locked, limited-access freezer at -16 ± 5°C. Freezer temperature will be automatically monitored four times a day. Cigarettes removed from -16°C storage will be preconditioned for at least 48 hours at room conditions (22 ± 2°C; 60 ± 10% RH).

e. Disposal. At the direction of the Sponsor, all unused test cigarettes will be returned or disposed of before the termination of the contract. Used test cigarettes will be disposed of by the chemistry group.

2. Diesel Fuel

a. Specification. Diesel fuel meeting the specifications listed below (either Type 1-D or Type 2-D) is recommended in the Code of Federal Regulations (40 CFR, 7-1-92, p. 795) for use in exhaust emission testing.

Item	Type 1-D	Type 2-D
Cetane Rating (%)	48 to 54	42 to 50
Distillation range:		
IBT, °F	330 to 390	340 to 400
10% point, °F	370 to 430	400 to 460
50% point, °F	410 to 480	470 to 540
90% point, °F	460 to 520	550 to 610
EP, °F	500 to 560	580 to 660
Gravity, API	40 to 44	33 to 37
Total sulfur, %	0.05 to 0.20	0.2 to 0.5
Hydrocarbon composition:		
Aromatics, %	8%[a]	27%[a]
Paraffins, napthenes, and olefins, %	92%	73%
Flashpoint, °F (minimum)	120	130
Viscosity, centistokes	1.6 to 2.0	2.0 to 3.2

[a]Minimum

b. Procurement. BNW has contacted several suppliers of Type 1-D and Type 2-D diesel fuel, and proposes to purchase a single batch of certified diesel fuel of sufficient quantity to complete all prestart testing, the subchronic study, and the chronic study. Currently, the estimated usage rate is ~13 gal/day and BNW estimates that 8,000 gallons of diesel fuel will be sufficient to complete the studies. Due to changes in the sulfur content of the diesel fuel that may be imposed by the U.S. Environmental Protection Agency (EPA), BNW cannot currently recommend the exact fuel type (1-D or 2-D) to be used for the chronic study. It is anticipated that by late 1993 or early 1994, new EPA specifications affecting sulfur content will be issued. Diesel fuel suppliers contacted by BNW are listed below.

Wondrack Distribution, Inc., Chevron U.S.A
Tri-Cities, WA 99302

2029227282

"Use or disclosure of proposal data is subject to the restriction on the Title page of this Proposal."

Source: https://www.industrydocuments.ucsf.edu/docs/hpxl0000

Howell Hydrocarbons
1201 South Sheldon Rd
Channelview, TX 77530-0429

Sun Refining and Marketing Company
P. O. Box 1135
Marcus Hood, PA 19061-0835

Amoco Oil Company
P. O. Box 3147
Southfield, MI 48034

c. Analysis. Initial tests to be performed on the diesel fuel are comprised of American Society for Testing and Materials (ASTM) reference methods as specified below.

- Accelerated oxidation for insolubles
  D 2274
  Oxidation vessel

- Sulfur content
  D 4294
  Energy-dispersive x-ray fluorescence

- Hydrocarbon types in liquid petroleum products
  D 1319
  Fluorescent indicator adsorption

- Water and sediment determination
  D 1796
  Centrifugation

In addition, BNW proposes to fortify the diesel fuel with metal deactivators and oxidation inhibitors at the vendor-recommended concentrations.

Samples will be taken quarterly from the top and bottom of the storage tank and tested for oxidation stability, water and sediment, metal deactivator content and oxidation inhibitor content. Any water found in the bottom of the tank when samples are drawn will be tested for biological growth. If biological growth is found, a biocide (e.g., Biobor JF; U.S. Borax, Los Angeles, CA and/or Vancide 51; RT Vanderbilt, Norwalk, CT) will be added to retard further biological growth. In the event the concentration of particulate matter, organic matter, etc., exceeds the vendor-recommended concentrations, BNW will take the appropriate action (filtration, treatment, or replacement) to correct the problem; however, such contingencies have not been included in the cost estimate of this proposal.

d. Storage and Inventory Control. The diesel fuel will be stored in an 8000-gallon, triple-wall, fire-protected, above-ground storage tank. The tank will be Underwriters Laboratory (UL)-approved for Class I and Class II petroleum liquids, with a volume sufficient to store a single batch of fuel for both the prestart testing studies. The tank will be painted with a reflective material and sheltered from direct sunlight. The tank and fuel-delivery system will be constructed of materials that prevent the fuel from coming into contact with harmful metals, such as copper and its alloys (e.g., monel) or zinc, usually found in galvanized coatings. A tank sentinel system will also be included, which will be capable of detecting and alarming leaks of 0.1 gal/hour. In addition, this system will print daily volume and temperature reports.

2029227783

"Use or disclosure of proposal data is subject to the restriction on the Title page of this Proposal."

Source: https://www.industrydocuments.ucsf.edu/docs/hpxl0000

A water-cooled heat exchanger will be installed in the tank and a constant flow of water at a temperature between 5 and 15°C will be circulated through the heat exchanger to stabilize the temperature of the fuel. Internal temperature of the tank will be monitored automatically four times/day. An alarm will indicate if temperature limits are exceeded.

e. Disposal. BNW's Waste Management and Environmental Compliance group will dispose of excess material remaining at the end of the studies.

B. EXPOSURE ATMOSPHERE GENERATION AND DELIVERY AND EXPOSURE SYSTEMS

1. Nose-Only Exposure Unit

The inhalation exposures will be performed with modified Cannon flow-past nose-only exposure units (Cannon et al., 1983) developed and patented by BNW and depicted in Figure IV-1. The system, which is designed to provided uniform concentrations of test material at all exposure ports, incorporates two concentric plenums, one that supplies fresh aerosol to the breathing zone of each animal and one that serves as the exhaust to remove the expired and "unused" aerosol. Air flow through the unit is set so that the animals do not rebreathe their own expired air and the concentric plenum design ensures that they do not breathe a neighboring animal's expired air. A minimum flow of 250 ml/minute will be provided at each exposure port.

The exposure units used for this study will have 104 exposure ports; up to 90 will be used to expose animals. The remaining ports will either be used for sampling or will be plugged. During exposure, the animals will be contained in 3- x 14.5-cm, ventilated, transparent polycarbonate tubes with an adjustable plug at the rear opening (CH Technologies; Westwood, NJ). These tubes are mounted to the ports of the exposure unit.

Each exposure unit will be enclosed in a transparent polycarbonate plastic cabinet on a stainless-steel stand. The cabinet will isolate the exposure unit from the exposure room, but still allow observation of the animals. A door on one side of the cabinet will allow easy loading and unloading of the animals. The exposure unit will rotate on a turntable to allow access to all animals. The cabinet will be vented through a high-efficiency particulate air (HEPA) filter to the building exhaust system and will be operated at a slightly negative pressure with respect to the room.

The exposure units will be operated in pairs (Figure IV-2) at essentially identical concentrations; one for exposure of female mice, the other for males. Single units for each concentration will be used for the subchronic study with both males and females being exposed simultaneously in each unit. On-line monitoring of TPM and CO will be performed through nose ports in one of the pair of exposure units. This method of on-line monitoring will reduce the number of monitoring systems required, thus reducing costly maintenance and calibration. During prestart system validation, daily filter samples will demonstrate that the TPM and CO concentrations in the two units are essentially identical.

2. System Layout

Figure IV-3 shows a diagram of the rooms in the basement of LSL-II that BNW proposes to use for the DEE and RASS studies.

The diesel engine, dynamometer and dynamometer control, and data acquisition system will be contained in Room 511. This room will also contain a spare engine. Both engines will be mounted on movable stands to facilitate quick and easy exchange. A tank containing sufficient fuel for 1 day of exposure will also be housed in this room, with the main fuel storage tank located in a fenced, paved area outside the building.

2029227284

"Use or disclosure of proposal data is subject to the restriction on the Title page of this Proposal."

Source: https://www.industrydocuments.ucsf.edu/docs/hpxl0000

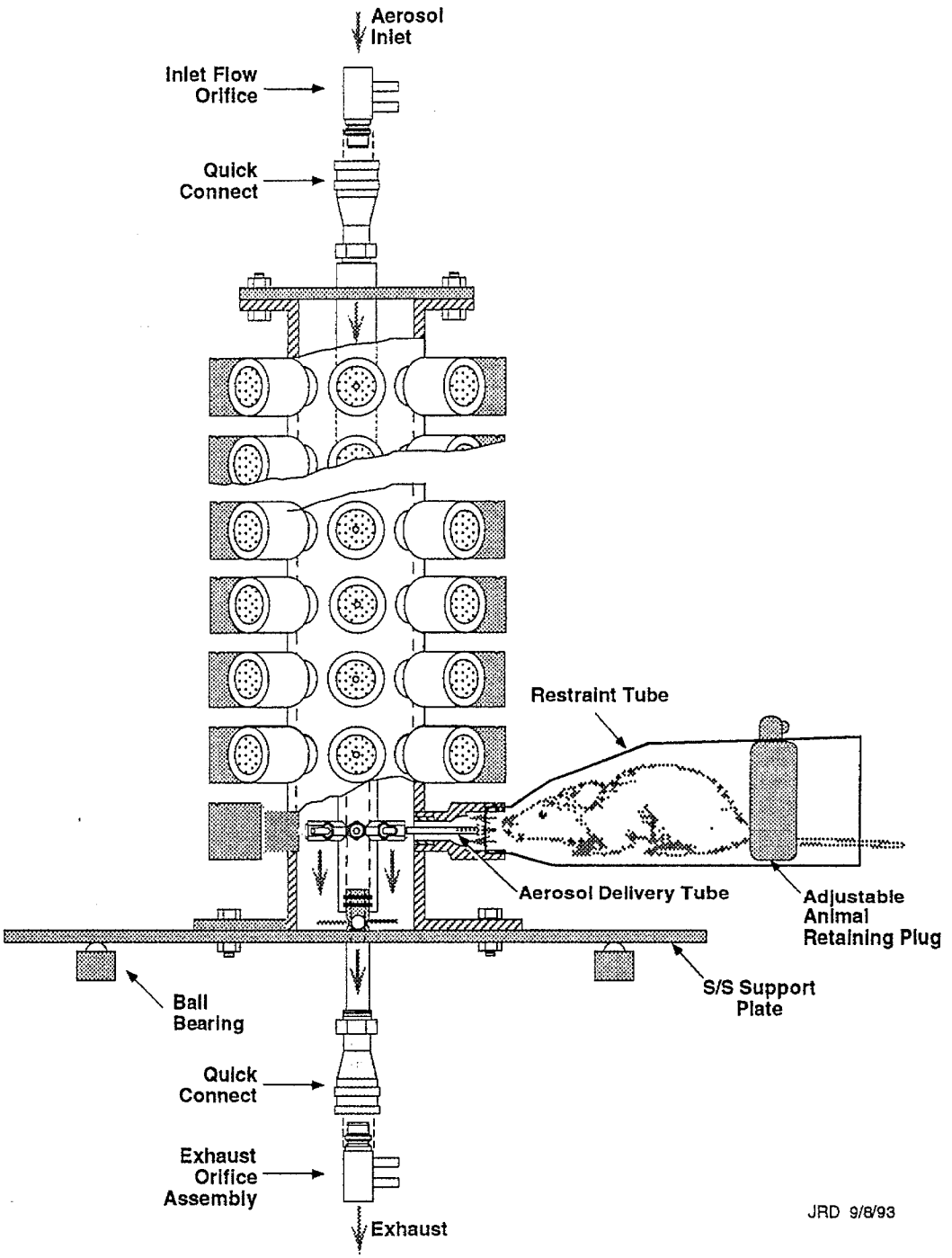

2029227285

FIGURE IV-1. Diagram of the Modified Cannon Nose-Only Exposure Unit

"Use or disclosure of proposal data is subject to the restriction on the Title page of this Proposal."

Source: https://www.industrydocuments.ucsf.edu/docs/hpxl0000

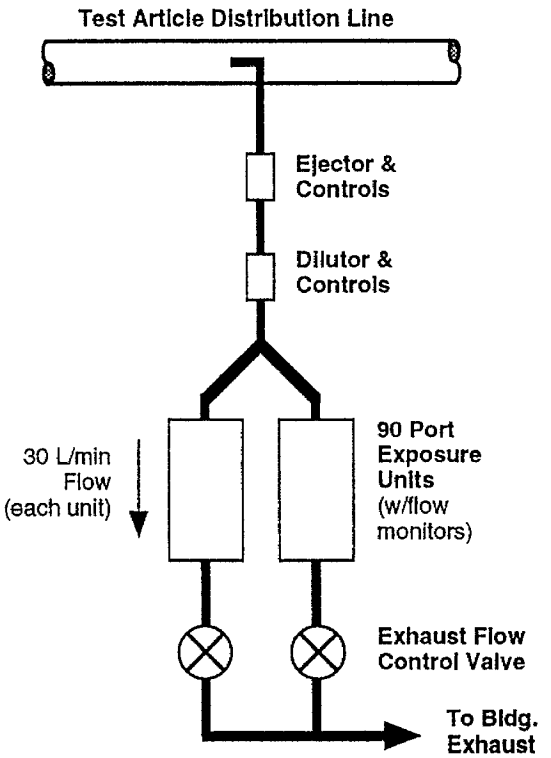

2029227786

FIGURE IV-2. Diagram of Paired Arrangement of Nose-Only Exposure Units

"Use or disclosure of proposal data is subject to the restriction on the Title page of this Proposal."

Source: https://www.industrydocuments.ucsf.edu/docs/hpxl0000

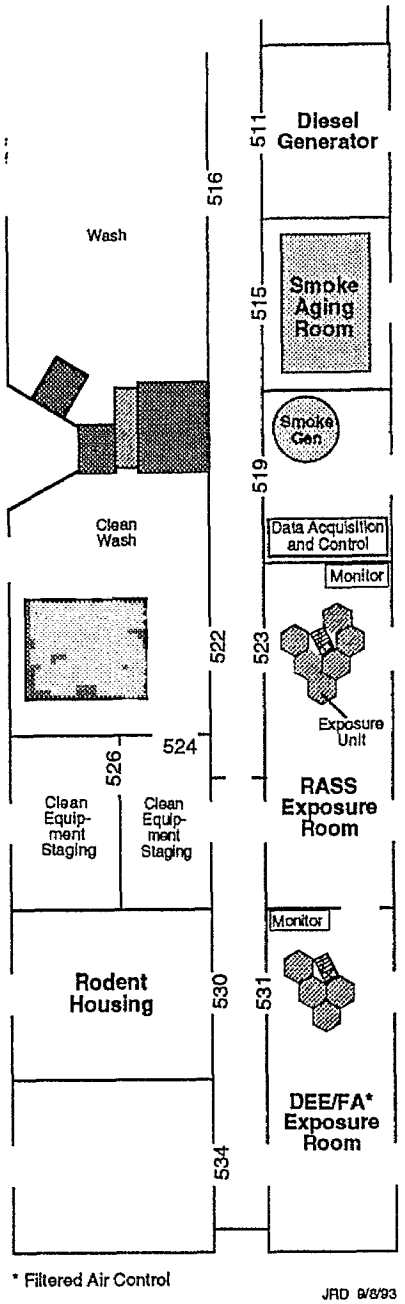

FIGURE IV-3. Portion of the Basement of the Life Sciences Laboratory-II Building Showing Room Layout of the Room-Aged Sidestream Cigarette Smoke (RASS) Generator and Aging Room, the Diesel Engine Exhaust (DEE) Generator, the Animal Exposure Rooms, and the Animal Housing Room

2029227787

"Use or disclosure of proposal data is subject to the restriction on the Title page of this Proposal."

Source: https://www.industrydocuments.ucsf.edu/docs/hpxl0000

The cigarette smoke exposure machine will be located in Room 519. The smoke aging room will be located in Room 515. Room 519 will also contain the automated exposure data acquisition and control system. An exposure technician can attend to both the routine operation of the cigarette smoking machine and the data acquisition and control system.

The three RASS exposure unit pairs for the chronic study will be located in Room 523. A delivery line will carry the RASS from the aging room to the exposure units. The two DEE exposure unit pairs, as well as the two filtered-air exposure unit pairs, will be located in Room 531. A heated delivery line will carry the diesel exhaust from the engine room to a location near the exposure chambers.

All the animals will be housed in Room 530 and transported to the exposure rooms prior to exposure.

3. RASS Generation and Delivery System

a. Introduction. The cigarette smoke test article will be RASS, which is taken as an experimental model for ETS. A schematic diagram of the RASS generation system and aging room is shown in Figure IV-4. A diagram of the RASS delivery system is shown in Figure IV-5.

b. Smoking Machine. Sidestream smoke will be collected as the test cigarettes, 1R4F, are smoked by a 30-port smoking machine (Model 1300C, CH Technologies, Westwood, NJ). Standard puffing conditions (Table IV-3) following guidelines of International Standards Organization (ISO) Standards #3402, #4387 and #3308 will be used.

A stainless-steel cone will be fitted over the smoking machine to extract the sidestream smoke. Conditioned dilution air (22 ± 2°C and 60 ± 10% RH) will be mixed with the smoke before being injected into a smoke-aging room by a controlled-flow fan. Mainstream smoke from the smoking machine will be passed through a filter system to remove the majority of the particulate material before it is routed to the building exhaust.

c. Smoke-Aging Room. The sidestream smoke will be aged in a 30-m^3 (~10- x 13- x 8-ft) room contained in Room 515 of LSL-II. The aging room will be constructed of wallpaper-covered drywall attached to steel studs. The floor will be epoxy-paint-covered concrete. A sealed door will allow access to the aging room. Lighting will be provided by a single incandescent lamp, which will normally be turned off during smoke generation. Optimal lighting conditions that may affect RASS composition will be considered in cooperation with the Sponsor. The aging room will be maintained at a temperature of 22 ± 2°C with 60 ± 10% RH. A constant air flow of 60 m^3/hour through the room will satisfy the required ventilation rate of two air changes/hour and a mean aging time of ~0.5 hour. Mixing fans will be installed in the mixing room to ensure a uniform atmosphere. TPM buildup and decay times in the aging room will be evaluated experimentally during the pre-exposure testing phase.

2029227788

"Use or disclosure of proposal data is subject to the restriction on the Title page of this Proposal."

Source: https://www.industrydocuments.ucsf.edu/docs/hpxl0000

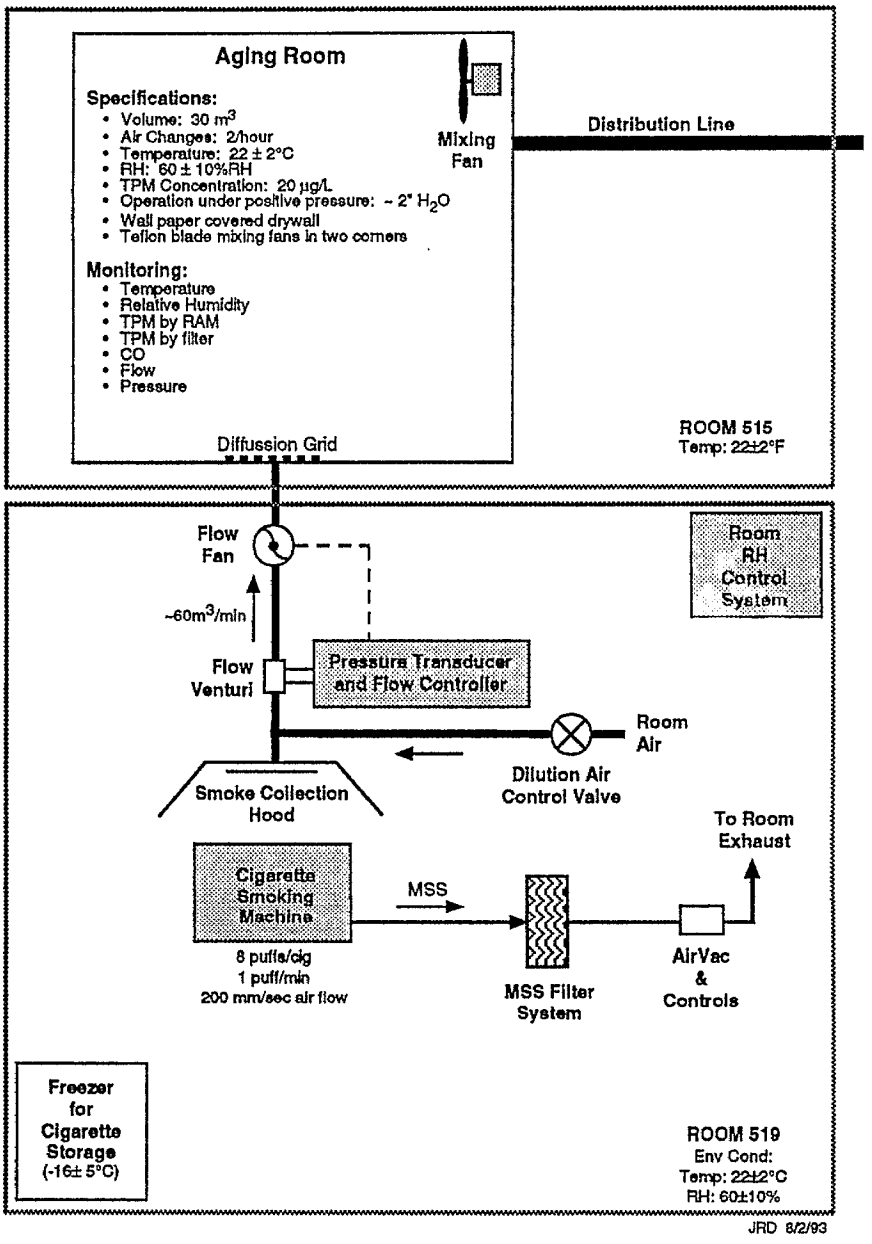

FIGURE IV-4. Schematic Diagram of the Sidestream Cigarette Smoke Generation System and Aging Room

2029227789

"Use or disclosure of proposal data is subject to the restriction on the Title page of this Proposal."

Source: https://www.industrydocuments.ucsf.edu/docs/hpxl0000

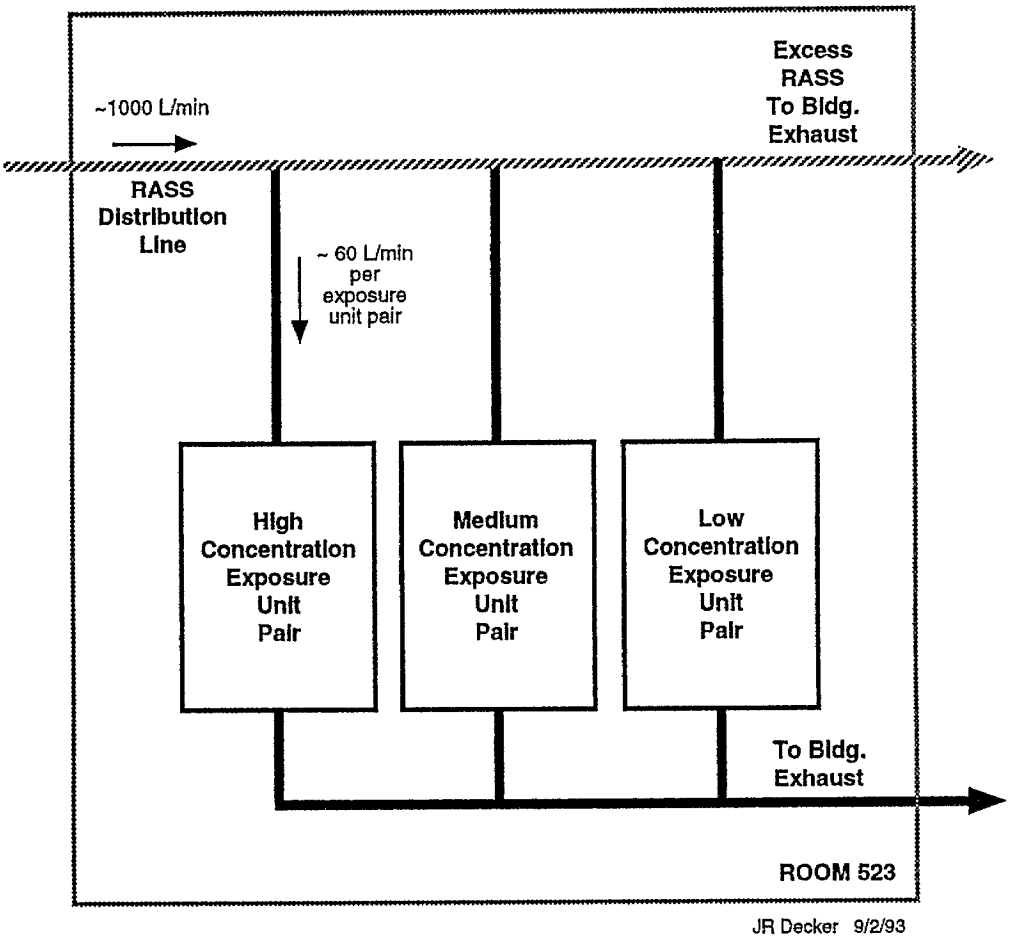

2029227/30

FIGURE IV-5. Schematic Diagram of the Room-Aged Sidestream Cigarette Smoke Distribution and Exposure System

"Use or disclosure of proposal data is subject to the restriction on the Title page of this Proposal."

Source: https://www.industrydocuments.ucsf.edu/docs/hpxl0000

TABLE IV-3. Conditions of Smoke Generation and Collection

Puff volume	35 ml
Puff duration	2 seconds
Puff number[a]	8
Puff frequency	One puff/minute
Air velocity around the cigarette	200 mm/second

[a]ISO Standard #4387 defines the standard butt length as the greatest of three lengths: 23 mm, length of the filter plus 8 mm, or overwrap plus 3 mm. In the smoking machine proposed, a "butt length switch" controls the length of the cigarette rod smoked, before the butt is automatically dumped into an ashtray. The switch is set at the factory for a 35-mm butt length, but can be adjusted for other lengths. An alternative is taking a set number of puffs (e.g., six puffs after the first lighting puff) from each cigarette instead of smoking them to a fixed butt length. Because the number of puffs required to reach a consistent butt length can vary from cigarette to cigarette, this alternative will ensure a consistent and whole puff number for each cigarette.

Aerosol and CO concentrations will be monitored in the aging room for 30 minutes before the start of each exposure. TPM concentration in the aging room and in the distribution line should be at least twice as high as the maximum chamber concentration desired (i.e., 20 mg/m^3). The loss of particulate material from smoke during dilution and aging has been reported between 20 and 50% (Baker and Proctor, 1990; Guerin et al., 1992; Ingebrethsen et al., 1988; Pritchard et al., 1988). An approximate estimate of the cigarette consumption rate can be made as shown below. This estimate includes a factor of 1.5 for the loss of TPM due to dilution and aging, assumes 16.9 mg TPM delivery/cigarette, and allows for 1 hour of generation, prior to exposure, for buildup and mixing/aging (i.e., a total of 7 hours of generation).

$$\frac{1.5 \times 20\ mg\ TPM/m^3 \times 60\ m^3/hour \times 7\ hours/day}{16.9\ mg\ TPM/cigarette} = 746\ cigarettes/day$$

BNW estimates that ~13 cigarettes will be smoked at the same time. Assuming that 15 cigarettes must be loaded every 7 minutes, a total of 900 cigarettes/day will be required. Since the capacity of the automatic loading device on the smoke generator is ~400 cigarettes, the reservoir will be manually loaded about every 3 hours.

Temperature and RH in the aging room will be automatically monitored approximately every 2 hours during smoke generation. Air pressure in the aging room, which will be slightly positive compared to the laboratory room, will be manually recorded daily. Aerosol and CO concentration will be automatically recorded approximately twice per hour.

d. Delivery System. The entire flow from the aging room will be delivered to the exposure rooms via a stainless-steel delivery tube. The required flow of RASS will be withdrawn from this delivery line by a pneumatically controlled ejector tube, mixed with conditioned air to achieve the proper concentration, and injected into the nose-only exposure unit (Figure IV-5). Exhaust from the exposure unit will be routed through a flow-control valve to an exhaust tube maintained at a negative differential pressure

2029227791

"Use or disclosure of proposal data is subject to the restriction on the Title page of this Proposal."

Source: https://www.industrydocuments.ucsf.edu/docs/hpxl0000

by a pneumatic pump. All RASS exhaust will be passed through a filter system to remove the majority of the particulate material before being routed to the building exhaust.

4. DEE Generation and Delivery System

a. Overview. A schematic diagram of the proposed DEE generation system is shown in Figure IV-6. The DEE will be generated from a light-duty pickup truck engine on a shock-mounted engine stand attached to a dynamometer system. The dynamometer will be programmed to simulate the EPA *Urban Dynamometer Driving Schedule* (40 CFR, Chapter 1, Pt. 86, Appendix I). This test sequence is normally performed on a chassis dynamometer utilizing the complete vehicle and drive train. However, BNW will simulate this using a motoring dynamometer that will control both the acceleration and deceleration of the engine. The data acquisition and control system associated with the dynamometer (Section IV.B.4.d) will be capable of simulating the proposed cycle.

A schematic diagram of the proposed DEE distribution and exposure system is shown in Figure IV-7. A constant flow of DEE from the engine will be delivered from a plenum downstream from the engine muffler to the exposure rooms through heated stainless-steel delivery lines. Flow will be maintained by a pneumatic pump located at the downstream end of the delivery tube. The required flow of DEE will be withdrawn from this delivery line by a pneumatically controlled ejector tube, mixed with conditioned air to achieve the proper concentration, and injected into the nose-only exposure unit. Exhaust from the exposure unit will be routed through a flow control valve to an exhaust tube maintained at negative relative pressure by a pneumatic pump. All DEE exhaust will be routed to the building exhaust.

The exhaust must be at room temperature on entry into the nose-only exposure units. To accommodate the required reduction in temperature, the exhaust will be cooled gradually as it traverses the duct leading from the engine to the exposure unit. If further cooling is necessary, a cooling plenum will be placed just upstream from the exposure unit.

The engine will be supplied with clean air taken from the animal facility corridor. Fuel will be supplied from a 20-gal tank, which will be kept full by a pump connected to a larger tank located outside the building.

All engine control functions will be performed by the dynamometer control system, including starting, acceleration, and deceleration. The dynamometer control system will also monitor the operating conditions of the engine. A second, identical engine will be ready on a test stand in the event that the primary engine malfunctions. Both engines will undergo break-in as specified by the manufacturer before being used in the studies.

Routine maintenance will be performed on the primary engine during nonexposure periods. This will include oil and filter changes at every 3000-mile equivalents. Other maintenance will be performed as recommended by the engine manufacturer and recorded in an operating log.

b. Simulating the EPA *Urban Dynamometer Driving Schedule*. The EPA *Urban Dynamometer Driving Schedule* is a protocol for performing emissions testing from light- and medium-duty vehicles. The procedure calls for a series of accelerations, decelerations, and stops over a period of ~23 minutes, and a 7.5-mile distance. This cycle is shown graphically in Figure IV-8. The EPA protocol specifies the vehicle speed on the chassis dynamometer. Upon installation of the engine and dynamometer, a calibration of speed versus revolutions per minute (rpm) and torque will be performed. These data will be used to set the appropriate rpm and torque corresponding to the EPA-specified protocol. Before the start of exposures each day, the engine will warm up during one complete cycle, after which it will idle until the animals are ready for exposure. The cycle will be repeated ~16 times during the 6-hour + T_{90} exposure regimen.

2029227792

"Use or disclosure of proposal data is subject to the restriction on the Title page of this Proposal."

Source: https://www.industrydocuments.ucsf.edu/docs/hpxl0000

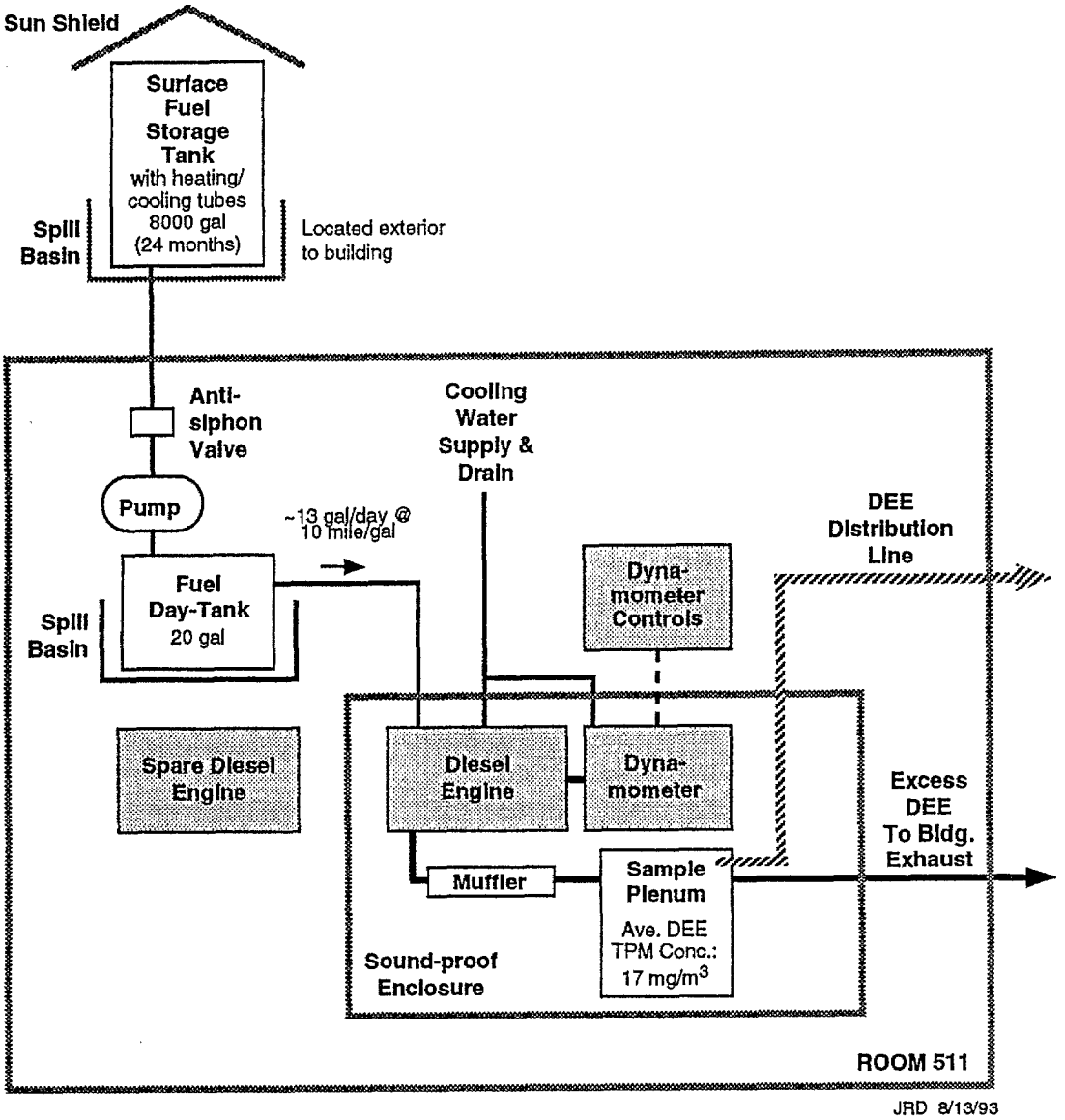

2029227793

FIGURE IV-6. Schematic Diagram of the Diesel Engine Exhaust Generation System

"Use or disclosure of proposal data is subject to the restriction on the Title page of this Proposal."

Source: https://www.industrydocuments.ucsf.edu/docs/hpxl0000

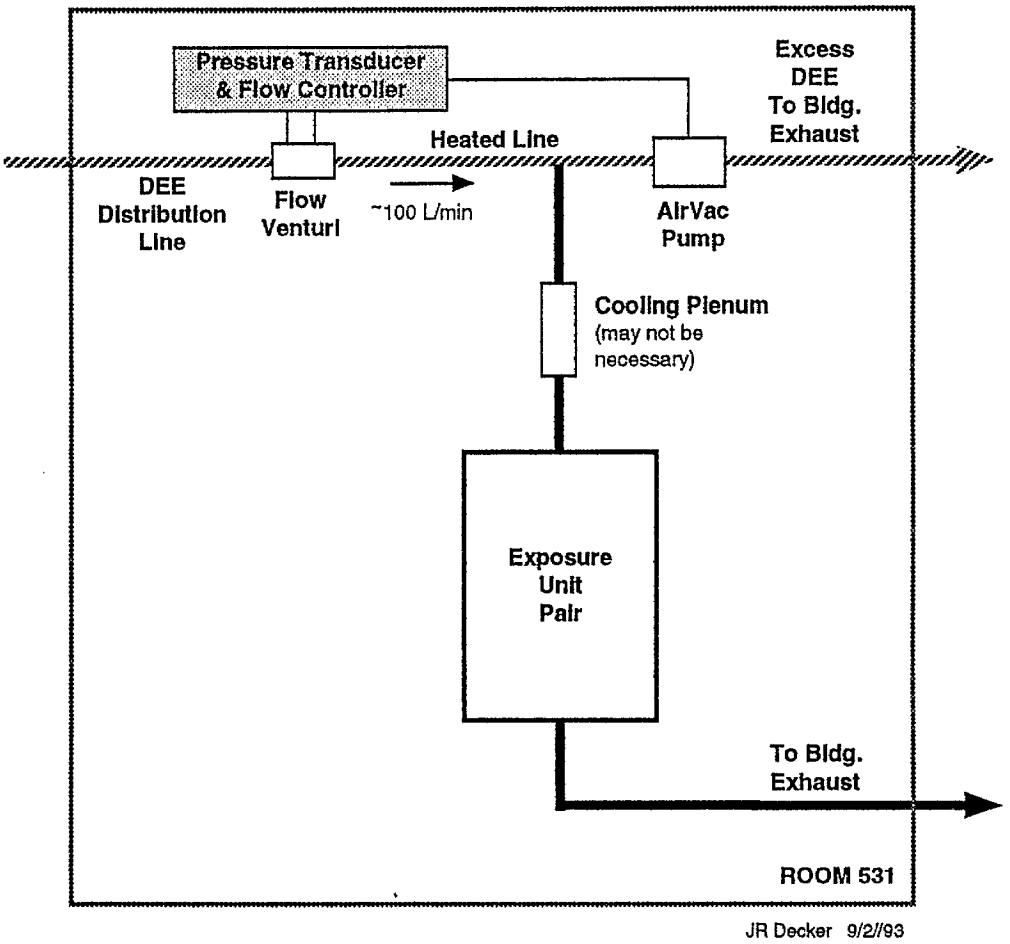

2029227794

FIGURE IV-7. Schematic Diagram of the Diesel Engine Exhaust Distribution and Exposure System

"Use or disclosure of proposal data is subject to the restriction on the Title page of this Proposal."

Source: https://www.industrydocuments.ucsf.edu/docs/hpxl0000

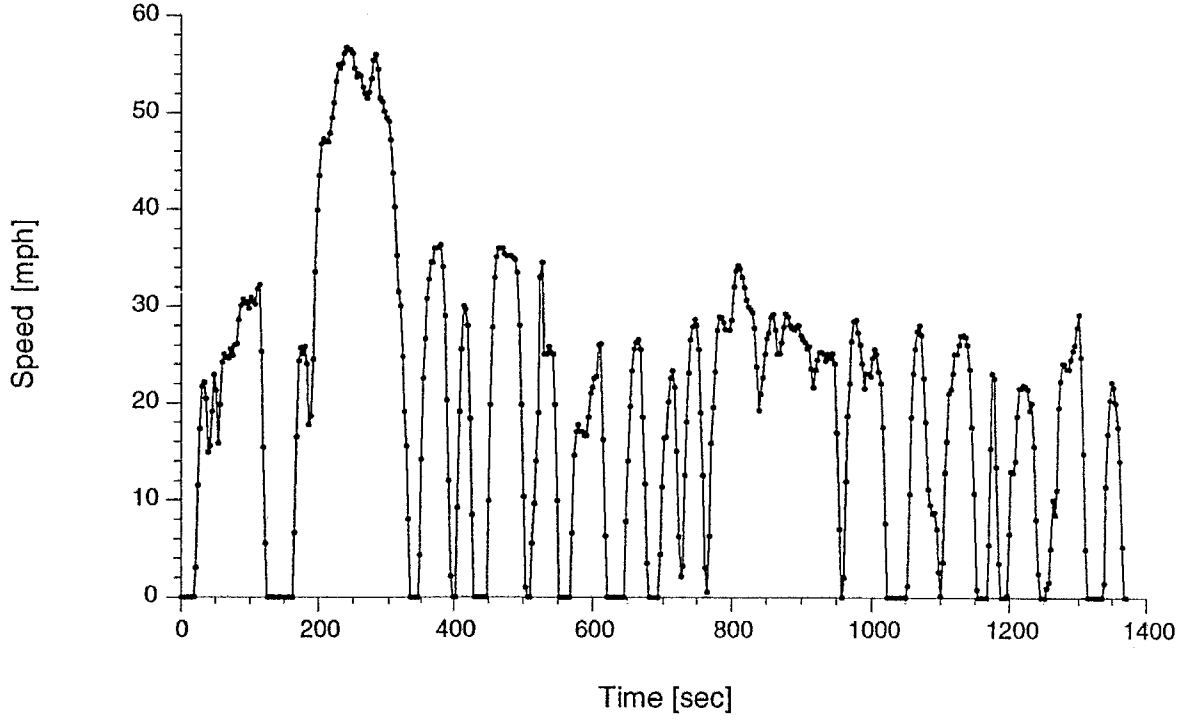

FIGURE IV-8. Graph of U.S. Environmental Protection Agency Urban Dynamometer Driving Schedule

"Use or disclosure of proposal data is subject to the restriction on the Title page of this Proposal."

2029227795

Source: https://www.industrydocuments.ucsf.edu/docs/hpxl0000

c. Engine Selection. BNW has identified three manufacturers of light-duty diesel engines that would be acceptable for the proposed studies. Ford Motor Company (Detroit, MI) provides a 7.3-L engine and General Motors Corporation (Detroit, MI) manufactures a 6.5-L engine for their respective lines of pickup trucks. Cummings Diesel (Columbus, IN) also manufactures a light-duty pickup truck engine that is used by Chrysler Corporation (Detroit, MI) in its Dodge pickup trucks. This engine has the lowest particulate emissions of the three and would probably not be our first choice.

At least two engines will be required for the study, one serving as a backup at all times. As presented above, the EPA *Urban Dynamometer Driving Schedule* specifies a 7.5-mile, 23-minute cycle. For the proposed exposures, this will entail the equivalent of approximately 120 miles/day or 31,200 miles/year. Two engines should be adequate to complete the study.

d. Dynamometer System. In order to perform the EPA *Urban Dynamometer Driving Schedule*, a complete vehicle must be run on a chassis dynamometer. However, an accurate simulation of the performance of an engine used in a particular vehicle can be made with a motoring dynamometer. This device controls the load (torque) on the engine during acceleration or deceleration. During deceleration, the drive train is actually turning the engine. There are a number of manufacturers of motoring dynamometers but BNW proposes to utilize a system designed and built by Dyne Systems Co. (Mequon, WI) consisting of a dynamometer with a 220-horse power (hp) absorbing and 200-hp motoring capacity, a direct current (dc) motoring dynamometer controller, and a throttle controller. The system will also have an automated data acquisition and control unit to operate the engine through the required EPA cycles.

Alternatively, a simple absorbing dynamometer system could be used; however, a flywheel system would be necessary to produce the required torque load for the engine. Further, such a system would not provide the load experienced by an engine during deceleration, and would therefore not accurately reproduce the EPA test procedure.

e. Expected Concentrations of Engine Emissions--Particulates and Nitrogen Oxides (NO_x). Diesel engines are manufactured to meet strict and ever-decreasing EPA emission requirements. The current 1993 EPA standard is 0.2 g/mile for particulates, and 1.2 g/mile for oxides of nitrogen. For the toxicity studies, this poses the potential difficulty of producing sufficient diesel particulate while still maintaining safe levels of nitric oxide (NO) in the exposure chambers. In studies on the effects of diesel particulate, the engines employed had much higher particulate emission levels and, consequently, the nitrogen oxides were diluted along with the particulates to manageable concentrations. A chronic diesel exhaust study was performed in our laboratories with General Motors' 4.3-L Oldsmobile engines running at constant speed and torque 20 hours/day, 7 days/week, producing particulate concentrations up to 1.5 mg/m^3. The total NO_x concentrations averaged as high as 7.4 ppm. In a study performed at the Lovelace Institute, a 5.7-L Oldsmobile diesel engine was used to produce particulate concentrations of 7 mg/m^3. Corresponding NO concentrations were 9.82 ppm. This study was performed using a modified EPA driving test procedure. Because the amount of nitrogen oxides produced is largely related to the engine temperature, the ratios of the two measurements (particulates to NO_x) in the studies cannot be compared. Further, the quantity of particulates produced is a function of the driving conditions.

(1) Particulates. To estimate the particulate concentration that will be available and the required engine-emission dilution, a number of assumptions must be made. For the 7.5-mile, 23-minute EPA cycle at 0.2 g/mile average total particulate emissions, the average generation rate of diesel particles would be expected to be 65.6 mg/minute. The instantaneous value would, of course, be constantly changing as the engine cycled. The air flow from the engine would also vary from values as low as 1700 L/minute at idle to as high as 9200 L/minute at full throttle. Choosing an average air flow of 3750 L/minute to match the average particulate generation rate of 65.6 mg/minute, yields an average expected concentration of 17.5 mg/m^3. The proposed high DEE concentration of 10 mg/m^3 should therefore be achievable with up to a twofold dilution of the emissions. If the engine particulate emissions are too low, simple

2029227796

"Use or disclosure of proposal data is subject to the restriction on the Title page of this Proposal."

Source: https://www.industrydocuments.ucsf.edu/docs/hpxl0000

adjustments to the fuel pump can be made to increase them, however, fuel pump adjustments also affect the gaseous emissions.

(2) NO_x. Of greater concern than the possibility of insufficient particulate emissions may be the concentrations of NO_x produced by the engine. The engine may produce average concentrations up to 1.2 g/mile. For NO, the principle oxide expected, 1 ppm is equivalent to 1.2 mg/m^3. Applying the same air flow considerations as above suggests that possible average NO concentrations could be as high as 87.6 ppm in undiluted exhaust. This possibility is of concern because the expected dilution will only be a factor of two, resulting in NO concentrations potentially averaging 44 ppm. The threshold limit value (TLV) for NO is only 25 ppm. If the target diesel particulate concentrations are reduced, there will be a corresponding reduction in the NO concentrations. However, the potential for high NO concentrations must be considered in the study design.

f. Control and Characterization of the DEE in the Exposure Units. The exposure concentration will be expressed as the average concentration recorded over each EPA cycle of the engine, approximately every 23 minutes. Adjustments to the exposure concentration will be achieved primarily by adjusting dilution air flow rates. Mass concentrations of DEE in the exposure units will be monitored with a tapered element oscillating microbalance (TEOM; Rupprecht & Patashnick Co., Inc.; Albany, NY) mass monitor and the particle size distribution will be determined with a combination of optical counting devices and cascade impactors, as described in Section IV.C.1.b. Other components of DEE will be measured as described in Section IV.C.1.a.

C. CHARACTERIZATION AND CONTROL OF EXPOSURE SYSTEM

In this proposal BNW has taken the approach that the purpose of chemical-specific measurements is not to exhaustively characterize the chemical composition or physicochemical behavior of DEE or RASS. Rather, the basic approach is to characterize these two very complex mixtures, via the quantitation of judiciously selected marker compounds, such that the composition of the exposure atmospheres can be meaningfully compared to similar studies. The measurements summarized in Table IV-4 represent a limited set of chemical and physical parameters commonly measured to characterize ETS and diesel exhaust. The compositions of the vapor and particulate phases will be characterized by analyzing compounds that are predominantly present in each phase. In addition, the chemical composition of the exposure atmospheres, in terms of both tobacco-specific products and general combustion products, will be performed. The list of analyzed compounds also includes several that are suspected to be the more toxic compounds present in DEE and RASS.

While the proposed chemical-specific characterization of the exposure atmosphere is more extensive than that for some previous studies, this characterization is necessary to allow comparison with previous and future studies and help explain toxicological effects. It is BNW's goal to characterize the exposure atmosphere to meet these updated standards in the current literature. For example, in the case of aromatic amines, PAHs and nitro-PAHs, BNW has expanded the number of specific compounds determined beyond those normally measured as marker compounds. This is expected to involve only a modest increase in cost, while yielding a significant increase in useful information. However, if prestart method development or the subchronic study results show this is not the case, then the number of analytes determined for these classes of compounds will be reduced. Similarly, BNW will also attempt to maximize opportunities to include new measurements that provide significant information about the exposure atmospheres.

In addition to measurements to characterize the chemical composition of the exposure atmosphere, several measurements will be made with the additional purpose of maintaining control of the exposure atmosphere concentration. The concentration of the aerosol will be controlled primarily by frequent, nonchemical-specific measurements of TPM. An on-line, chemical-specific measurement of CO will also be performed. The on-line CO measurements will provide the exposure operator with information needed to

2062277797

"Use or disclosure of proposal data is subject to the restriction on the Title page of this Proposal."

Source: https://www.industrydocuments.ucsf.edu/docs/hpxl0000

control the exposure concentrations. Furthermore, it is essential that the animals are not exposed to excessive CO levels.

TABLE IV-4. Chemical-Specific Characterization of the Exposure Atmospheres

Measurement	Method	Frequency	Samples
TPM	Gravimetric	Daily	DEE, RASS
UV/TPM	UV-spectrophometry	2-3/week	DEE, RASS
CO	Nondispersive infrared	Continuously	DEE, RASS, FA
CO_2	Nondispersive infrared	Weekly	DEE, RASS
Nicotine/3-ethanyl-pyridine	GC/MS	Weekly	RASS, FA
NO/NO_x	Chemiluminescence	Weekly	DEE, RASS
Trace acids	Ion chromatography	Quarterly	DEE, RASS
Aldehydes	HPLC	Monthly	DEE, RASS, FA
Solanesol	HPLC	Monthly	RASS
Benzene, isoprene, 1,3-butadiene	GC/MS	Monthly	DEE, RASS
Nitrosamines	HPLC/TEA	Quarterly	DEE, RASS
Catechol and other phenols	HPLC	Monthly	DEE, RASS
Selected PAHs	GC/MS	Monthly	DEE, RASS, FA
Nitro-PAHs	HPLC/TEA	Monthly	DEE, RASS, FA
Aniline, 2-aminonapthalene and 4-aminobiphenyl	GC/MS	Monthly	RASS
Heavy metals	ICP-MS	Every 6 months	DEE, RASS, FA
Sulfur dioxide	UV-fluorescence	Monthly	DEE, FA
Total hydrocarbons	FID	Monthly	DEE

KEY: CO = Carbon monoxide; CO_2 = Carbon dioxide; DEE = Diesel engine exhaust; FA = Filtered air; FID = Flame ionization detector; GC = Gas chromatography; HPLC = High-performance liquid chromatography; ICP = Inductively coupled plasma; MS = Mass spectroscopy; PAH = Polycyclic aromatic hydrocarbons; PM = Particulate matter; RASS = Room-aged sidestream cigarette smoke; TEA = Thermal energy analyzer; TPM = Total particulate matter; UV = Ultraviolet

The relationship between TPM, ultraviolet particulate matter (UV-PM), and other frequently determined parameters will be analyzed for trends as the data are obtained. Changes in the relationship between these parameters may indicate that changes are occurring in test atmosphere composition as a result of changes in the generation or delivery systems. The appropriate corrections will then be made to ensure proper control of exposure atmosphere composition and concentration.

1. Methods

a. Chemical Characterization of RASS and DEE Test Articles

(1) TPM and UV-PM. TPM, which includes total solid and liquid aerosols, is the primary controlling parameter for RASS and DEE exposures. BNW anticipates that the proposed generation techniques will result in a TPM particle size for the RASS and DEE exposures that will consist primarily of respirable, suspended particles.

Duplicate filters will be collected at 0.5 L/minute at selected nose ports of each exposure unit for the full exposure period (6 hours plus T_{90}). After filters are equilibrated to a constant temperature and humidity, they will be weighed on a calibrated microbalance. TPM will be defined as the weight increase of the standard glass fiber Cambridge filter (Guerin et al., 1992) following sample collection.

2029227798

"Use or disclosure of proposal data is subject to the restriction on the Title page of this Proposal."

Source: https://www.industrydocuments.ucsf.edu/docs/hpxl0000

The UV-PM assay is a method designed to selectively determine the concentration of aromatic compounds on respirable suspended particles in samples originating from ETS, and is designed to be used in tandem with gravimetric TPM measurements. The UV-PM assay involves collecting particles on filters, extracting the filters with methanol, and analyzing the solution spectrophotometrically for UV light absorbance at 325 nm. Standards are either prepared from gravimetric samples of RASS or DEE, or from a surrogate standard material.

The UV-PM assay has two purposes in these studies: 1) determining the extinction coefficient of the generated RASS and DEE will provide information on the chemical nature of the generated aerosols. The UV-PM concentration is believed to be proportional to the concentration of single- and multi-ring aromatic compounds present in the aerosol. These aromatic compounds, in addition to azo- and poly-unsaturated compounds, are known to absorb strongly at UV wavelengths. 2) The UV-PM assay enables quantification of filter samples containing RASS and DEE below the limit of quantitation of the gravimetric assay. The UV/PM assay can be validated against gravimetric analysis of TPM samples that can be accurately weighed.

Sampling. Since the collection medium and sample size can both influence the UV-PM assay and gravimetric TPM measurements, the filter medium must trap a high percentage of particles and allow determination of a stable, accurate weight. In addition, it must also give reproducible, efficient recovery of the sample in the solvent for an accurate UV-PM determination. Because RASS and DEE samples may contain particles composed of semivolatile compounds, large sample columns may result in partial evaporation and produce results that underestimate the TPM. To avoid these errors, experiments involving different sampling times and volumes will be performed during the method development phase to validate the UV-PM assay method. Short-term samples of RASS and DEE will be collected using the TEOM monitor to observe the mass lost by evaporation of volatile materials. If a consistent and predictable loss is observed, the TPM filter samples can be corrected for this loss.

The estimated extinction coefficient for PM is 0.0060 to 0.0063 absorbance units (AU)·ml/μg (Rando et al., 1992). DEE is expected to have a similar or higher extinction coefficient due to its relatively high concentration of polycyclic aromatic compounds. Given these extinction coefficients, samples containing as little as 3 μg should permit accurate analyses.

Samples will be collected on 0.2-μm-pore-diameter Teflon membrane filters (Fluoropore FALP 02500; Millipore Corporation, Bedford, MA) from one port of each exposure unit at a flow rate of ~0.5 L/minute for up to 6 hours. This will allow more than adequate sensitivity for UV-PM measurements at the expected concentrations. Gravimetric calibration samples will be obtained from the distribution line at flows of 0.5 to 2 L/minute to trap sufficient TPM to allow an accurate mass determination.

Analytical Methodology. The analytical procedure described below is based on the work of Conner et al. (1990), who found the method to give good collection efficiency, low breakthrough, and little or no sample evaporation for sample volumes up to ~240 L.

Filters will be conditioned at ~22°C and 60% RH before and after weighing with a microbalance to obtain the tare and final masses. Sample filters will be placed in clean, labeled, ~24-ml glass bottles with Teflon-lined caps. The samples will be extracted by adding 2.0 to 20.0 ml of methanol, followed by 30 minutes of orbital shaking. Tests will be performed during methods development to ensure complete extraction is achieved using this technique. Approximately ~1.5 ml of extract will be transferred to labeled automatic liquid sample (ALS) vials and analyzed by flow injection analysis with a HPLC UV/visible detector.

Calibration will be accomplished by weighing filter samples collected from the distribution lines of either the RASS or DEE exposure systems. These samples, with a known mass of TPM, will be extracted and serial dilution of the extracts will be made. Using these as standards, a calibration curve of peak area

2029227799

"Use or disclosure of proposal data is subject to the restriction on the Title page of this Proposal."

Source: https://www.industrydocuments.ucsf.edu/docs/hpxl0000

(from flow injection analysis) versus concentration (microgram/milliliter) will be prepared and used to analyze samples taken from the exposure units.

Standards and samples will be analyzed using flow-injection analysis with automated sample analysis and computerized calibration curves. The flow-injection analysis parameters are described in Table IV-5. Analysis time is estimated to be less than 30 seconds/sample or standard.

TABLE IV-5. Flow-Injection Analysis Parameters for UV Particulate Matter

Detector	ABI 785A ultraviolet/visible
Autosampler	Hewlett-Packard (HP)-1050
Data Acquisition Hardware	Gateway 2000
Data Acquisition Software	HP high-performance liquid chromatography chem-station (DOS Series), version A.01.03
Buffer Column	~300 cm, 0.2 mm stainless steel
Mobile Phase	100% methanol
Injection Volume	100 µl
Flow Rate	1 ml/minute
Analytical Wavelength	325 nm
Calibration	External calibration method

In addition, the molar extinction coefficient for RASS and DEE TPM will be evaluated. The absorbance of filter extracts containing known amounts of TPM will be measured at 325 nm using conventional spectrophotometry.

The results of samples collected and analyzed for TPM by UV absorbance will be reported in micrograms/milliliter. UV-PM results will be multiplied by the total extraction volume to obtain micrograms/sample. This will be divided by the volume of the exposure atmosphere sampled to obtain TPM concentrations in milligrams/cubic meter. Results obtained by UV-PM will be compared to the TPM concentration determined by weighing Cambridge filter pads and the results from the TEOM monitor.

(2) Carbon Monoxide (CO). Carbon monoxide is a commonly recognized toxin that is lethal at very high concentrations and contributes to cardiovascular and other health effects with prolonged exposure. Popular U.S. commercial filter-tipped cigarettes deliver approximately 15 mg of CO in mainstream smoke and an additional 50 mg in sidestream smoke (Guerin et al., 1992). Carbon monoxide emission in DEE from light-duty trucks has been found to be about 1270 mg/mile (International Agency for Research on Cancer [IARC], 1989).

Analytical Methodology. BNW proposes using a Horiba CO monitor (Model 350-E, Horiba Instruments, Inc.; Irvine, CA), which is designed for reliable, continuous, unattended measurements of CO. The Model 350-E employs nondispersive infrared absorption to determine the presence of CO. This instrument exceeds all performance specifications made by EPA and the European Environmental Testing Agency. The

20292278800

"Use or disclosure of proposal data is subject to the restriction on the Title page of this Proposal."

Source: https://www.industrydocuments.ucsf.edu/docs/hpxl0000

output of the CO monitors will be interfaced to the main data acquisition and control system by a dedicated computer running proprietary software developed by BNW.

The Horiba Model 350-E has a lower limit of detection of 0.06 ppm for CO and electronic noise within 0.03 ppm. The instrument has a very high specificity for CO; the only reported interference being water (~0.4 ppm CO at 100% RH). BNW will maintain the exposure atmosphere at ~60% RH; thus there will not be significant interference resulting from the presence of water vapor in the system. The working range of the Horiba Model 350-E is 0 to 100 ppm CO, which BNW anticipates will be adequate.

Because the mass concentration of DEE is continually changing as the engine is cycled, one CO monitor will be required to measure the CO concentration in the DEE exposure unit pair. This CO monitor will report the average CO concentration during the 23-minute engine cycle. A second CO monitor will be multiplexed to measure the CO concentration in each RASS exposure unit pair, the filtered-air unit pair, and the RASS aging room.

The monitors will be calibrated against commercially certified CO gas standards. The calibration will be verified during routine operations by measuring an on-line gas standard containing a known concentration of CO.

(3) Carbon Dioxide (CO_2) Determination. Carbon dioxide, produced by the combustion process, is a major constituent of ETS (Greyson, 1990) and DEE (IARC, 1989).

Analytical Methodology. BNW proposes using a Horiba Model VIA-510 monitor, which is designed for reliable, continuous, unattended measurements of CO_2. This model employs nondispersive infrared absorption and is highly specific for CO_2.

The Horiba Model VIA-510 has a lower limit of detection of ~2 ppm for CO_2. BNW estimates that the lowest concentration of CO_2 to be measured will be ~15 ppm over the ambient concentration of 330 ppm. Thus the instrument will have acceptable sensitivity for this study. The VIA-510 detector has the unique capability of measuring sample gases containing particularly high levels of interfering substances. The working range of the Model VIA-510 is 0 to 100% CO_2, although it is also equipped with specific ranges to improve sensitivity and accuracy.

The monitor will be calibrated monthly using certified standard gases encompassing the expected concentration range. A certified standard of CO_2 in nitrogen will be sampled prior to routine measurements to determine detector drift.

(4) Nicotine/3-Ethenylpyridine. Nicotine and its pyrolysis product, 3-ethenylpyridine, have been widely used as markers for ETS in the assessment of indoor air quality. ETS is the major source for these compounds in indoor air, which makes them selective markers for concentrations of vapor-phase components of ETS. Unlike nicotine, the fate of 3-ethenylpyridine has been shown to closely mimic that of other volatile organic compounds produced from tobacco smoke (Eatough et al., 1989; Heavner el al., 1992; Nelson et al., 1992). Thus, monitoring 3-ethenylpyridine concentrations will provide a marker for the concentration of volatile components of RASS.

Research on tobacco smoke usually includes measurements of nicotine, and considerable data are available on the relation between smoke composition and nicotine concentrations. Nicotine in ETS is predominantly present in the vapor phase as the free base. Recent studies have shown that nicotine in the vapor phase is rapidly depleted from the field environment, as well as from test atmospheres, due to surface adsorption (Guerin et al., 1992), leading many researchers to question the usefulness of using nicotine as a marker for volatile organics in ETS. However, monitoring nicotine concentrations will serve to relate the proposed study to previous research.

2092280

"Use or disclosure of proposal data is subject to the restriction on the Title page of this Proposal."

Source: https://www.industrydocuments.ucsf.edu/docs/hpxl0000

Sampling. XAD-4 sorbent tubes (high-surface-area styrene-divinylbenzene copolymer resin) will be used to collect both nicotine and 3-ethenylpyridine from the RASS exposure atmospheres. Exposure atmosphere samples will be drawn through the sampling tubes for 10 minutes each at a flow rate of ~0.25 L/minute. For RASS exposures ranging from 1 to 10 μg/L, the expected amount of nicotine collected will range from 250 to 2500 ng; the amount of 3-ethenylpyridine is expected to range from 25 to 250 ng.

Analytical Methodology. Loss of nicotine is frequently observed on the walls of sample containers and sample manipulation accessories used in collection and analysis procedures. To minimize this adsorption, a strong base (triethylamine) will be added to the extraction solvent to preferentially react with the acidic sites on the glassware (Ogden et al., 1989). A variety of studies have been performed with triethylamine-spiked extraction solvent, showing good extraction efficiency for 3-ethenylpyridine. After collection, each bed of the sample tubes will be desorbed with 1.0 ml of 0.01% triethylamine in ethylacetate. The ethylacetate solution will contain 1000 ng/ml nicotine (methyl-D3) and 100 ng/ml 3-ethenylpyridine (ethenyl-D3) as isotopically labeled internal standards.

The samples will be analyzed by GC/MS using an HP-5971 MSD system operated in the selected ion monitoring mode. The instrument will be calibrated against gravimetrically prepared standards of nicotine and 3-ethenylpyridine. Standards will be freshly prepared for each analysis set. A 5% diphenyl to 95% dimethyl polysiloxane capillary column will be used for chromatographic separation.

Samples will be collected twice each week for nicotine and 3-ethenylpyridine determinations. Samples will be collected shortly after the start of exposure and again shortly before the end of exposure from each of the three concentrations of RASS test atmospheres, as well as from the filtered-air atmosphere. The sample tubes from both days of sampling will be saved and analyzed as one set within the week of collection; the tubes will be capped and kept at ~5°C until analysis.

The XAD-4 sample tubes contain two separate beds of sorbent. During exposure generation testing, exposure atmosphere samples will be collected and both beds will be analyzed for nicotine and 3-ethenylpyridine. The collection efficiency will be assessed for these compounds by comparing breakthrough from the initial sorbent bed to the backup sorbent bed. BNW expects >95% collection efficiency using the XAD-4 sample tubes. Alternative collection media will be investigated if significant breakthrough is encountered.

For samples collected for exposure assessment, the sorbent beds will be desorbed and analyzed within 5 days after sample collection. During generation testing, analyses will be performed to assure that degradation of the analytes does not occur on the sorbent bed prior to desorbtion. Duplicate sorbent tubes will be collected from each of the RASS exposure units. One set of tubes will be immediately desorbed and analyzed, while the duplicate will be capped and stored for 1 week before being desorbed and analyzed. If significant degradation is noted, the sample tubes will be desorbed and analyzed immediately after sample collection for exposure assessment.

During method validation, standards will be prepared with and without XAD-4 sorbent to assess analytical interferences and sample loss arising from the sorbent material.

(5) Nitrogen Oxides and Trace Acids. The oxides of nitrogen (NO_x), are principally formed by the combustion of nitrogen-containing constituents of fuels and by the high-temperature oxidation of nitrogen. Nitrogen dioxide (NO_2) and nitric oxide (NO) comprise more than 90% of the NO_x in cigarette smoke (Guerin et al., 1992). It is well established that NO and NO_2 can be used as markers for engine exhaust (IARC, 1989).

Analytical Methodology for NO and NO_x. BNW proposes the use of the LMA-3 NO_2 analyzer (Scintrex, Ontario, Canada) to measure NO_2 concentrations in RASS and DEE. This analyzer offers sensitive, direct detection of NO_2 based on the chemiluminescence resulting from NO_2 reaction with an aqueous

2029227802

"Use or disclosure of proposal data is subject to the restriction on the Title page of this Proposal."

Source: https://www.industrydocuments.ucsf.edu/docs/hpxl0000

luminal solution. Operating this analyzer with an LNC-3 Luminox NO converter accessory (Scintrex, Ontario, Canada) will permit sequential detection of NO_2 and NO_x (NO_2 + NO) via the conversion of NO to NO_2.

An additional advantage of this instrument is its highly specific response to NO_2. The response of the analyzer is insensitive to common trace atmospheric gases such as nitric acid, ammonia, sulfur dioxide (SO_2), formaldehyde, CO_2 and CO. The LNC-3 NO converter also possesses operational characteristics that permit interference-free measurement of NO_x. In contrast, NO_x converters associated with NO chemiluminescent analyzers are subject to the positive interference that results when other nitrogen-containing trace gases are converted to NO. The efficiency of the LNC-3 NO converter must, however, be determined at the time of calibration in order to document stable converter performance. The vendor-declared detection limit of the LMA-3 analyzer is <0.01 ppb NO_2. The response is linear above ~2 ppb.

The analyzer will be calibrated using a certified standard NO_2 permeation tube with a dynamic calibrator. Calibration mixtures over the range of concentrations encountered in the test atmospheres will be generated by adding metered amounts of purified air to the gas stream used to flush the thermally controlled permeation chamber. A certified gas mixture of NO in nitrogen will be used to confirm the effeciency and stability of NO conversion. A certified standard of NO and NO_2 in nitrogen will be sampled before exposure atmosphere sampling.

Analytical Methodology for Nitrous Acid (HNO_2) and Nitric Acid (HNO_3). Periodic measurement of the inorganic acids HNO_2 and HNO_3 is also recommended to fully characterize the test atmospheres. Nitric acid is produced from NO_x in the open atmosphere and is an important contributor to atmospheric acidity. Nitric acid has also been measured in both DEE and in ETS, although the concentrations in ETS have been reported to be more than an order of magnitude less than that of HNO_2, the major inorganic acid component (Eatough et al., 1989).

Acidic gases will be collected by passing a metered flow of the test atmosphere through an annular denuder. This device collects the analyte of interest on chemically treated walls of concentric glass tubes while allowing the passage of potentially interfering aerosol particles. Acidic gas collection is achieved with etched surfaces coated with sodium carbonate (Na_2CO_3)/glycerine. At the end of the sampling period, the collected acids will be removed by extraction and measured as nitrite and nitrate ions by ion chromatography. In addition to minimizing potential interference from particulate nitrate, the proposed sampling method also collects SO_2, providing an independent determination of SO_2.

(6) Formaldehyde, Acrolein, and Other Aldehydes. At least 20 aldehydes have been identified in the vapor phase of cigarette smoke, the most abundant being formaldehyde (3 to 40 µg/cigarette), acetaldehyde (519 to 1144 µg/cigarette), propionaldehyde (25 to 116 µg/cigarette), and acrolein (11 to 228 µg/cigarette; IARC, 1985). Several of these compounds, especially formaldehyde and acrolein, are toxic to cilia. They can inhibit lung clearance after inhalation. Formaldehyde induces nasal carcinoma in rats (IARC, 1985). These compounds are also the most prevalent aldehydes in DEE (Lipari and Swarin, 1982). The estimated concentrations of these aldehydes in ~1 mg/m^3 TPM RASS and 10 mg/^{3} TPM DEE are listed in Table IV-6.

Because formaldehyde, acrolein, and other aldehydes are reactive and are present at low concentrations in the vapor phase of smoke, current sampling practices rely heavily on derivatization for accurate analysis. The measurement of aldehydes is subject to error as the result of interferences, particularly from ozone.

Sampling. The most common methods of aldehyde analysis involve derivatization with 2,4-dinitrophenylhydrazine (DNPH). Samples are generally collected in glass impingers containing a solvent and the derivatizing agent. To increase sample throughput and avoid problems with DNPH contamination, BNW proposes sample collection using DNPH-coated silica cartridges (Sep-Pak Silica● DNPH cartridges; Waters, Milford, MA), incorporating an ozone scrubber to reduce ozone interferences observed with solid-phase sam-

2029227803

"Use or disclosure of proposal data is subject to the restriction on the Title page of this Proposal."

Source: https://www.industrydocuments.ucsf.edu/docs/hpxl0000

pling. Samples will be collected from a nose port of each exposure unit at a flow rate of ~0.25 L/minute for up to 6 hours, if needed, which will allow more than adequate sensitivity at the expected concentrations.

TABLE IV-6. Aldehyde Concentrations in Room-Aged Sidestream Cigarette Smoke (RASS) and in Diesel Engine Exhaust (DEE)

Compound	Approximate Concentration in RASS (μg/L)	Approximate Concentration of DEE (ppm)
Formaldehyde	0.05 to 0.5	0.25
Acrolein	0.08 to 0.3	0.05
Acetaldehyde	0.5	0.05
Propionaldehyde	0.05	0.03

To avoid contamination, unopened sample pouches will be stored at ~3°C until ready for use. Since background levels of hydrazone derivatives increase slightly with time and temperature, cartridges stored at room temperature in sealed pouches for periods over 1 week will be tested prior to use.

Analytical Methodology. Samples will be collected directly on DNPH-coated silica sample tubes. Immediately after sample collection, tubes will be capped tightly and placed in a labeled sample pouch. The samples will be extracted with internal standard (cyclohexanone) in 1 ml of acetonitrile over 1 minute, followed by 3 ml of acetonitrile over 1 minute into a 5-ml volumetric flask. The extract will be diluted to a final volume of 5 ml. After diluting to volume, the samples will be mixed and ~1.5 ml will be transferred to labeled ALS vials and analyzed by HPLC (Table IV-7).

The accuracy of the solid-phase sample tubes and incorporated ozone scrubber will be verified using the impinger method before the start of the study. Glass impingers containing acetonitrile and DNPH will also be used to collect the aldehydes. The impingers will be prepared the same day the sample analysis is to take place. All stock solutions of DNPH will be kept isolated and under vacuum until the day of analysis. Once impingers are prepared, they will be kept capped until immediately prior to sampling. Caps will be replaced immediately after sampling. A known volume of internal standard will be added to each impinger after sampling. The impingers will then be mixed well and ~1.5 ml will be transferred to labeled ALS vials and analyzed by HPLC (Table IV-7).

Validation and recovery of both the solid-phase sample tubes and the impinger methods will be accomplished by spiking the sample devices with known concentrations of the aldehydes. Standards will be prepared with the same internal standard to be used in sampling. The range of standard concentrations bracket the aldehyde concentrations expected in samples for both RASS and DEE.

Initial sample analysis of RASS cartridge or impinger samples will be used to screen the samples for the presence of other aldehydes. These results will allow a general characterization of aldehydes and ketones present in the RASS and DEE.

(7) Solanesol. Solanesol, a high-molecular-weight trisesquiterpenoid alcohol, is associated exclusively with the particulate fraction of ETS. It is very specific to tobacco smoke and is a reliable tracer for respirable suspended particles attributable to ETS (Ogden and Maiolo, 1992).

2029227804

"Use or disclosure of proposal data is subject to the restriction on the Title page of this Proposal."

Source: https://www.industrydocuments.ucsf.edu/docs/hpxl0000

TABLE IV-7. High-Performance Liquid Chromatography Analysis Parameters for 2,4-Dinitrophenylhydrazine Derivitives of Aldehydes

Detector	ABI 785A ultraviolet/visible
Autosampler	Hewlett-Packard (HP)-1050
Data Acquisition Hardware	Gateway 2000
Data Acquisition Software	HP High-performance liquid chromatography chemstation (DOS Series), version A.01.03
Analytical Column	Nova Pak C18, 3.9 mm x 150 mm; Part #86344
Mobile Phase	65% ultra-pure water; 30% acetonitrile; 5% tetrahydrofuran (uninhibited)
Injection Volume	10 µl
Flow Rate	1.5 ml/minute
Analytical Wavelength	360 nm
Internal Standard	Cyclohexanone; 99.8% (Aldrich; Catalog #C10,218-0)
Formaldehyde Standard	ACS Reagent; 37 wt% (Aldrich; Catalog #25254-9); Retention Time (RT) = ~3.2 minutes
Acrolein Standard	97% (Aldrich; Catalog #11022-1); RT = ~6.0 minutes
Acetaldehyde Standard	99% (Aldrich; Catalog #11007-8); RT = ~4.2 minutes
Propionaldehyde Standard	97% (Aldrich; Catalog #P5145-1); RT = ~6.7 minutes
2,4-Dinitrophenylhydrazine	70% (Aldrich; Catalog #D19930-3)

Solanesol is the most abundant terpenoid and acyclic isoprenoid found in the lipid fraction of tobacco. Isoprenoids are present in neutral subfractions of tobacco smoke condensate that have been reported as carcinogenic and tumor-promoting on mouse skin. Pyrolysis of tobacco extract, highly enriched with solanesol and its esters gave rise to the highest amounts of PAHs determined of any tobacco extract fractions or subfractions (IARC, 1985).

Sampling. Samples will be collected on 0.2-µm-pore-diameter membrane filters (Fluoropore FGLP 02500, Millipore Corp., Bedford, MA) from each exposure unit at a flow rate of ~1 to 4 L/minute for up to 6 hours. This should allow adequate sensitivity at the expected concentrations. The estimated concentration levels of solanesol in ~1 µg/L TPM RASS is ~0.05 µg/L.

Analytical Methodology. Recently Ogden and Maiolo (1992) compared GC and HPLC methodologies to determine solanesol in ETS. The GC procedure requires derivatization and manual on-column injection using a fused silica needle. The GC procedure was labor intensive and sample workup was inconsistent with companion analysis of the filter extracts for particulate matter by UV absorbance or fluorescence.

The HPLC method requires detection at 205 nm with a mobile phase of 95%:5% acetonitrile:methanol to achieve adequate baseline stability. Using a 100-µl injection volume provided an HPLC

2029227805

"Use or disclosure of proposal data is subject to the restriction on the Title page of this Proposal."

Source: https://www.industrydocuments.ucsf.edu/docs/hpxl0000

detection limit comparable to that of GC. The HPLC sample workup was simpler and provided an extract that was compatible with determining UV and fluorescent particulate matter. On the basis of these investigations, BNW plans to implement the HPLC method described by Ogden and Maiolo (1992) to determine solanesol content of the RASS particulate mater.

Filter samples will be placed in clean glass ~70 ml bottles immediately after collection. The samples will be extracted by adding ~3 ml of methanol, followed by sonication for 30 minutes. Approximately ~1.5 ml of extract will be transferred to labeled ALS vials and analyzed by HPLC as indicated in Table IV-8.

TABLE IV-8. Proposed High-Performance Liquid Chromatography Parameters for Solanesol Analysis

Detector	ABI 785A ultraviolet/visible
Autosampler	Hewlett-Packard (HP)-1050
Data Acquisition Hardware	Gateway 2000
Data Acquition Software	HP High-performance liquid chromatography chem-station (DOS Series), version A.01.03
Analytical Column	C8, 5 μm, 25 cm x 4.6 mm (Astec, Inc.; Whippany, NJ)
Mobile Phase	95% acetonitrile; 5% methanol
Injection Volume	100 μl
Flow Rate	1.2 ml/minute
Analytical Wavelength	205 nm
Calibration	External calibration method
Solanesol Standard	90+% (Sigma; Catalog #S8754); Retention Time = ~9.1 minutes

Validation and recovery of the solanesol sampling method will be accomplished by spiking the sample device with known concentrations of solanesol standards. The standards will be prepared gravimetrically and spiked onto the same filter medium as the samples. Standards will then be extracted as above. The range of standards will bracket the solanesol concentrations expected in RASS.

The most serious drawback to HPLC analysis of solanesol is the lack of a solanesol chromophore. It was found that UV detection is possible only at 205 nm, where nearly all organic compounds absorb. By using acetonitrile as the mobile phase, however, baseline stability can be achieved. It was also found that a UV detector with a deuterium lamp was ~50 times more sensitive at 205 nm than a UV detector with a xenon lamp. Chromatographic parameters will be modified to achieve the best possible detection and separation of solanesol. Using this method, Ogden and Maiolo (1992) indicated a detection limit of 0.02 μg with recovery of ~90%.

(8) Benzene, Isoprene, 1,3-Butadiene. The compound 1,3-butadiene has been shown to be a carcinogen in rats and mice (Huff et al., 1985). Benzene is a recognized human carcinogen (IARC, 1989), and isoprene is currently undergoing carcinogenicity testing in rodents. It has been suggested

2029227806

"Use or disclosure of proposal data is subject to the restriction on the Title page of this Proposal."

Source: https://www.industrydocuments.ucsf.edu/docs/hpxl0000

that isoprene might be utilized as a tobacco smoke tracer for unsaturated aliphatic hydrocarbons (Laforth et al., 1989).

This procedure is specifically designed to quantify 1,3-butadiene, isoprene, and benzene at concentrations of ~0.01-0.3 μg/L using a GC/MS analysis method. For a RASS concentration of 1 μg TPM/L, these compounds are expected to be present at approximately the following concentrations: 1,3-butadiene, ~0.03 μg/L; isoprene, ~0.15 μg/L; and benzene, ~0.04 μg/L.

Sampling. BNW proposes to use ORBO-32 charcoal sampling tubes (Supelco, Bellefonte, PA) for collecting RASS samples. BNW has extensively characterized the precision, accuracy, recovery, and breakthrough of isoprene collected, and has found them to be exceptionally well suited to this task. BNW anticipates that these tubes will also be suitable for collecting benzene and 1,3-butadiene.

Before the start of the study, breakthrough will be determined by preparing semi-quantitative gas bag standards of the components of interest. The gas bag standard preparations will contain approximately the same total amount of these compounds that will be collected from the RASS exposure. Breakthrough will be measured by comparing the amount of the compound found in the secondary bed of the sample tube to that found in the primary bed.

Analytical Methodology. BNW proposes using an HP-5890 gas chromatograph equipped with an HP-5971 MSD to analyze tube extracts. A J&W DB-1 capillary column (or equivalent) will provide separation of the benzene, isoprene, and 1,3-butadiene. Using this system, the limit of quantitation for these compounds is expected to be ~5 to 50 pg/μl.

Validation and recovery of the sampling method will be accomplished by spiking the sampling device with known concentrations of benzene, isoprene, and 1,3-butadiene. Standards of these chemicals will be prepared in the concentration range expected in the RASS samples. An internal standard will be used to compensate for variation in injection volume. These standards will be prepared with and without the charcoal bed from an ORBO-32 sampling tube. Linearity, recovery, precision, and accuracy will be determined from these standards.

During prestart testing, BNW will also collect samples from the distribution line and from one port of the exposure unit to characterize background levels of these compounds before tobacco smoke is introduced into the exposure system. Samples will be analyzed by acquisition of the full mass spectrum and a library search will be conducted on the mass spectrum from all major peaks. These measures will allow BNW to determine whether any other compounds identified by the library search need to be investigated further or be included in the analysis procedure for the chronic study.

(9) Nitrosamines. N-nitrosamines are of particular interest because they are quite biologically active. Tobacco smoking is the only known source for nitrosamines in nonoccupational indoor air, where they are found in significantly greater amounts in sidestream smoke than in mainstream smoke (Guerin et al., 1992). The major tobacco-specific nitrosamines are generally recognized as NNN and NNK, which originate from nicotine (Brunnemann et al., 1992; Hecht et al., 1992; Hoffman and Hecht, 1985).

Sidestream smoke also contains several volatile nitrosamines. N-nitrosodimethylamine (DMNA), N-nitrosodiethylamine (DENA), and N-nitrosopyrrolidine (NPYR) are the volatile nitrosamines formed in the greatest amounts and are typically selected for routine quantitative measurements (Brunnemann et al., 1980; Guerin et al., 1992). The volatile nitrosamines can originate from protein pyrolysis, as well as from other processes, resulting in their presence in a wide variety of consumer products. They are also present at detectable quantities in ambient air (Brunnemann et al., 1980; Guerin et al., 1992; IARC, 1985). Nitrosamines have also been reported in diesel engine crankcase emissions (Goff et al., 1980).

2029227807

"Use or disclosure of proposal data is subject to the restriction on the Title page of this Proposal."

Source: https://www.industrydocuments.ucsf.edu/docs/hpxl0000

The procedure implemented by BNW will be designed to quantify NNN, NNK, DENA, DMNA, and NPYR at concentrations of ~5 to 50 ng/m^3. For a RASS concentration of 1 mg/^{3}, these compounds are expected to be present at approximately the following concentrations: NNN, ~10 ng/m^3; NNK, ~20 ng/m^3; DMNA, ~20 ng/m^3; and NPYR, ~10 ng/m^3.

Sampling. Nitrosation of amines occurs rapidly in the presence of NO_x. To accurately quantify the concentration of a nitrosamine, nitrosation must be prevented within the collection medium during and after sampling. Initially, BNW will collect nitrosamines on potassium-bisulfate-treated Cambridge filters (Brunnemann et al., 1992) to gain sensitivity and possibly reduce sample-preparation time. Another common method to block nitrosation involves collecting the sample in a glass bubbler or impinger tube containing an ascorbic acid solution buffered at an approximate pH of 4 to 4.5 (Brunnemann et al., 1992). BNW intends to use this sample-collection method as an alternative if problems are encountered with collection on filters.

Analytical Methodology. BNW proposes to procure a thermal energy analyzer (TEA; Thermedics, Model 502, Woburn, MA), which can be coupled to either GC or HPLC for detection. The TEA detector is highly selective for nitrosamines and the sensitivity is expected to be ~50 to 150 pg.

Although recently published methods indicate good results can be obtained for determining tobacco-specific nitrosamines using GC with thermal desorption (Brunnemann et al., 1992), BNW prefers using a narrow-bore HPLC for our initial attempts because of our previous experience with NNK analysis by HPLC. This approach avoids problems that may result from decomposition in the heated zones of the GC or thermal desorber. In the event that adequate performance cannot be achieved with HPLC, BNW will implement the thermal desorption/GC method of Brunnemann et al. (1992).

BNW will evaluate the collection efficiency of potassium-bisulfate-treated Cambridge filters for nitrosamines during prestart testing. A filter will be spiked with known concentrations of the target nitrosamines listed above. Air will then be drawn through the filter in the same manner the samples are collected from the exposure system. These filter samples will then be analyzed for recovery, precision, and accuracy relative to gravimetrically prepared standards. If BNW demonstrates sufficient collection efficiency of these treated filters, samples will be collected from the distribution line using both treated filters and bubblers containing a buffered solution of ascorbic acid. This latter method of collection has been shown to block nitrosation of amines and thus provide a reference point for the treated-filter method.

A nontobacco-related nitrosamine will be used as an internal standard to correct for preparation errors. Another internal standard will be added after sample preparation to compensate for variations in injection volume and detector response.

(10) Catechol and Other Phenols. Over 200 semivolatile phenols have been identified in cigarette smoke, including various polyphenols (IARC, 1985). The more prevalent phenols and polyphenols found in cigarette smoke are shown in Figure IV-9. Phenol is the most prevalent of these compounds in mainstream smoke. The cresol isomers, xylenols, 2-methoxyphenol, and 4-vinylguaiacol are found at lower concentrations. Catechol is the major hydroxyphenol identified in cigarette smoke, with smaller amounts of cresols (three and four isomers), 4-ethylcatechol, and 4-vinylcatechol. The primary precursors of volatile phenols and catechols are believed to be glucose, pectins, rutins, polysaccharides and polyphenols.

The method described below allows the determination of hydroquinone, resorcinol, catechol, phenol, m+p-cresol, and o-creosol. Because of their similar chemical characteristics and ability to determine them with a common analytical method, BNW proposes to include them in the catechol analyses as described below.

2029227808

"Use or disclosure of proposal data is subject to the restriction on the Title page of this Proposal."

Source: https://www.industrydocuments.ucsf.edu/docs/hpxl0000

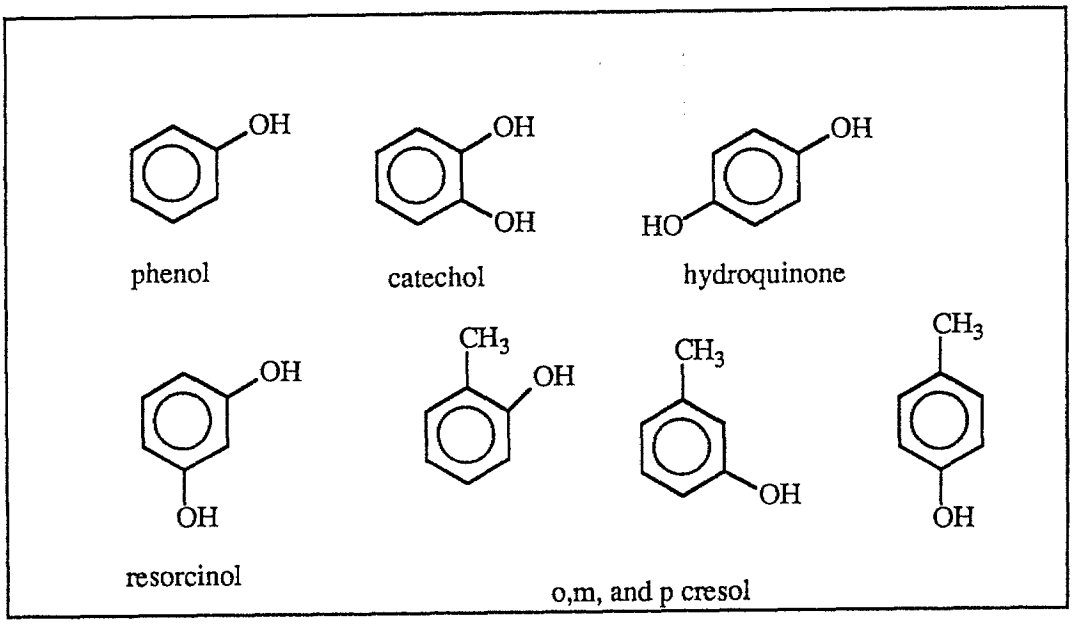

FIGURE IV-9. Tobacco-Related Phenols and Catechols

The method described below uses the sensitivity of the fluorescence detector to allow detection of low phenol/catechol concentrations. The method also uses time-programmed selection of wavelengths to allow increased selectivity for the compounds of interest.

The estimated concentrations of catechol and phenol in 1 μg/L of RASS are expected to be ~0.01 μg/L of each component. Hydroquinone, resorcinol, and cresols are expected to be present at approximately one-half to one-fifth the concentration of the phenol. Given these concentrations and an analytical limit of quantification of <50 ng, an elution volume of 15 ml, and an injection volume of 1 ml, a minimum sample size of ~75 L will be required from the 1-μg/L RASS exposure to determine phenol and catechol. Typical samples from the exposure units are expected to be ~180 L. The lower concentrations of the substituted phenols and catechols may prevent accurate determination of these substituted compounds at the lower concentrations of RASS.

Sampling. Samples will either be collected on Cambridge filter pads or in solvent-filled impingers from a port on each exposure unit at a flow rate of ~0.5 L/minute for up to 6 hours (180 L), allowing more than adequate sensitivity at the expected concentrations.

Analytical Methodology. The analytical procedure described below is based on the work of Risner and Cash (1990), who found this method to give good collection efficiency, low breakthrough, and high recovery. Samples collected on Cambridge pads will be extracted with 15 ml of 1% aqueous acetic acid. Impingers will be prepared using 15 ml of 1% aqueous acetic acid. Sample aliquots will be transferred to ALS vials for analysis.

Standards will be prepared gravimetrically in 1% aqueous acetic acid using two gravimetrically prepared stock solutions and highly pure commercially available neat material. Standards and samples will

2029227809

"Use or disclosure of proposal data is subject to the restriction on the Title page of this Proposal."

Source: https://www.industrydocuments.ucsf.edu/docs/hpxl0000

be analyzed using HPLC with automated sample analysis (Table IV-9) and computerized calibration curves. Analysis time is estimated to be ~60 minutes/sample or standard.

TABLE IV-9. High-Performance Liquid Chromatography Parameters for Phenol and Catechol Analysis

Detector	Hewlett-Packard (HP)-1046A programmable fluorescence detector
Pump	HP-1050 quaternary
Autosampler	HP-1050 with extended sample loop
Data Acquisition Hardware	Gateway 2000
Data Acquition Software	HP High-performance liquid chromatography chemstation (DOS Series)
Analytical Column	4.6 x 250 mm ODS
Mobile Phase	Gradient of 100% of 1% aqueous acetic acid to 100% of 1% acetic acid in acetonitrile
Injection Volume	1000 µl
Flow Rate	1.5 ml/minute
Analytical Wavelength	Timed program: excitation of 274 to 304 nm; emission: 298 to 338 nm
Calibration	External calibration method

Analytical results will be reported in micrograms/liter and as micrograms of compound/micrograms of RASS.

(11) Selected Polycyclic Aromatic Hydrocarbons (PAHs), Nitropyrene, and Nitro-Polycyclic Hydrocarbons. Polynuclear aromatic compounds (PACs) are a group of highly lipophilic chemicals that occur throughout the environment as pollutants, generally at trace levels. PACs arise from the combustion of organic matter from a wide variety of sources including DEE and mainstream and sidestream cigarette smoke. All classes of PACs are characterized by the polyaromatic structure, but the classes of from the nonpolar PAHs to more polar classes possessing functional groups containing oxygen, sulfur, or nitrogen. These include aldehyde and carboxylic-substituted PAHs; azarenes, amino-PAH, hydroxy-PAH and nitrated-PAH (nitro-PAH). Since the PACs have low vapor pressures, and are generally formed in association with combustion processes that also produce particles, they are predominately found adsorbed on particulate material. Since a large fraction of the PAC is associated with ultra-fine particles, the particle-borne PAHs are respirable (IARC, 1985).

At one time diesel exhaust was believed to be carcinogenic because of the presence of PAHs. It has subsequently been discovered that diesel particle extract contains over 100 nitro-PAHs (Paputa-Peck et al., 1983). Nakagawa and coworkers (1983) found that the dinitropyrene (DNP) isomers contributed 43% of the total mutagenic activity of the crude extracts, whereas 1-nitropyrene (1-NP) was responsible for less

2029227810

"Use or disclosure of proposal data is subject to the restriction on the Title page of this Proposal."

Source: https://www.industrydocuments.ucsf.edu/docs/hpxl0000

than 10% of the activity. Thus, although 1-NP is the predominate nitro-PAH, measurement of 1,6- and 1,8-DNP would appear to provide a more complete characterization of the nitro-PAH content of RASS and DEE.

The PAHs and nitro-PAHs selected for analysis are listed in Table IV-10. Part of the rationale for including benzo[a]pyrene (BaP), 1-NP, and the DNP isomers was discussed earlier; i.e., the strong biological activity of these compounds and the widespread use of 1-NP and BaP as markers. Besides BaP, the other specific PAHs in the four- to six-ring size were chosen based on the availability of standards, their biological activity, and their inclusion in several relevant standard reference materials (SRM) available through the National Institute of Standards and Technology. Also, most of the PAHs suspected as carcinogen contain four- to six-rings.

TABLE IV-10. Selected Analytes and Some Standard Reference Materials (SRMs) Containing Polycyclic Aromatic Hydrocarbons (PAHs) and Nitrated Polycyclic Aromatic Hydrocarbons (Nitro-PAHs)

Parent PAH	Molecular Weight	Stable Label	SRM #1650[a] (mg/kg)	SRM #1491[b] (mg/kg)	Nitro-Derivative(s)	SRM #1587[c] (mg/kg)	SRM #1596[d] (mg/kg)
Naphthalene	128.2	Aldrich		10.3	1 and 2-Nitro		
Biphenyl	154.2	Aldrich			4-Nitro		
Acenaphthene	154.2	Supelco		10.89			
Fluorene	166.2	Isotec		10.87	2-Nitro	9.67	
Anthracene	178.2	Aldrich	[0.88]	11.69	9-Nitro	5.01	
Phenanthrene	178.2	Aldrich	[71]	10.48			
Fluoranthene	202.3	Isotec	51	8.84	3-Nitro	9.24	
Pyrene	202.3	Isotec	48	8.81	1-Nitro 1,6-Dinitro 1,8-Dintro	8.95	4.38 4.82 8.9
Benzo[a]anthracene	228.3	Isotec	6.5	5.37	7-Nitro	9.27	
Chrysene	228.3	Aldrich	[22]	10.5	6-Nitro	8.13	
Benzo[k]fluoranthene	252.2		[2.1]	8.33			
Benzo[b]fluoranthene	252.2		7.85				
Benzo[a]pyrene	252.3		1.2	10.14	6-Nitro	6.1	
Benzo[ghi]perylene	276.3		2.4	7.9			

[a]SRM#1650 is diesel particulate matter and contains 19 mg/kg of 1-nitropyrene in addition to the listed PAHs. Values in brackets are uncertified (May et al., 1992).
[b]SRM#1491 is aromatic hydrocarbons in hexane/toluene
[c]SRM#1587 is nitrated PAHs in methanol
[d]SRM#1596 is dinitropyrene isomers and 1-nitropyrene in methylene chloride and also contains 1,3-dinitropyrene at 8.9 mg/kg

One reason for including pyrene is its role as a precursor to 1-NP and the DNPs. Including 1-NP and the DNPs will allow the assessment of relative amounts of these compounds and should allow determination of the relative degree of nitration of parent PAH throughout the study. Similarly, both 7-nitrobenzo[a]-

2022922811

"Use or disclosure of proposal data is subject to the restriction on the Title page of this Proposal."

Source: https://www.industrydocuments.ucsf.edu/docs/hpxl0000

anthracene and 6-nitrochrysene have been reported in diesel exhaust (Niles and Tan, 1989) and are included in SRM #1587.

While 1-NP is generally regarded as a marker for particle-bound nitro-PAH, 2-nitrofluorene (2-NF) has been advanced as a good choice for a marker of a nitro-PAH that is present in both the gas and particle phases. Advocates for the use of 2-NF in this regard point to the presence of 2-NF as one of the more common nitro-PAHs and the fact that 2-NF is a mutagen and a animal carcinogen. Accordingly, BNW has also included fluorene and 2-NF.

Several lower-molecular-weight PAHs are included because they are representative of gas-phase PAHs and are present at higher relative concentrations in DEE and RASS than the four- to six-ring compounds. Some of these lower-molecular-weight PAHs are of particular interest because an amino derivative is biologically active (2-aminonaphthalene and 4-aminobiphenyl). The corresponding nitro-compounds are present in diesel exhaust (Campbell and Lee, 1984; Paputa-Peck et al., 1983) and could be reduced either chemically or endogenously to the amino compounds or partially reduced to the nitroso or hydroxylamino derivatives. These amino compounds are also reportedly present in sidestream smoke, with the hemoglobin adduct of 4-aminopyrene being one of the most useful biomarkers of exposure discovered to date. For these reasons, BNW has included biphenyl, naphthalene, 4-nitrobiphenyl, and 2-nitronaphthalene in the list of proposed analytes.

Although BNW has cited reasoning for expanding the list of PAH and nitro-PAH analytes, method development may show that the difficulty involved in determining one or more of these analytes is too great for the purposes of the study. In those cases the particular analytes in question will be dropped after careful discussion with the Sponsor.

PAHs are well known to require care in sampling and sample processing because of their tendency to undergo oxidation or photolysis, and it is not uncommon to illuminate laboratory work areas with yellow light in an attempt to minimize photolysis. The formation of nitro-PAHs can occur when PAHs are exposed to NO_x. Thus, formation of nitro-PAH artifacts can occur during sampling, and must be minimized using short sampling times and reduced collection temperatures. BNW will carefully assess artifact formation and use the measures cited above for sampling and sample workup.

Sampling. A variety of filter types have been used to collect particulate matter to analyze RASS or DEE, including Teflon, Teflon-coated glass-fiber filters, and silica-fiber filters. Although glass-fiber filters are reported to give much higher yields for low-molecular-weight PAHs, the use of a PTFE (polytetrafluoroethylene) filter for aerosols, in conjunction with polyurethane foam or absorbents such as XAD-2 or Tenax (for capturing of more volatile compounds) is becoming a common procedure (Furton et al., 1993). In view of reports that PTFE may have less tendency to promote PAH degradation (Davis et al., 1987), BNW proposes to evaluate a PTFE filter backed with one of the common absorbents for sample collection. Although polyurethane foam is not as strong an absorbent as XAD-2, it is reported that using polyurethane foam avoids reactivity problems encountered when PAHs are collected with XAD-2 in an atmosphere containing NO_2 (Lindskog et al., 1991). Thus, the first absorbent evaluated will be polyurethane foam.

Exposure atmosphere samples will be drawn through the sampling filters for ~300 minutes each at a flow rate of ~0.5 L/minute. For RASS concentrations ranging from 1 to 10 μg/L, the expected amount of BaP collected is estimated to be 1 to 10 ng. In the case of DEE, these sampling parameters should give about 250 ng of BaP, 50 ng of 1-NP, and about 0.3 ng of 1,8- and 1,6-DNP.

Sampling will be initiated shortly after the start of exposure for each of the three concentrations of RASS test atmospheres, DEE test atmosphere, and the filtered-air exposure atmosphere. After sample collection, the filters will be stored in the dark, in sealed containers at ~5°C. The filter samples will be saved and analyzed as one set within 4 weeks after collection. Other investigators have determined that PAHs may

2022227812

"Use or disclosure of proposal data is subject to the restriction on the Title page of this Proposal."

Source: https://www.industrydocuments.ucsf.edu/docs/hpxl0000

be stored at room temperature in the dark for up to 118 days (Furton et al., 1993). BNW will independently evaluate sample stability.

During exposure generation testing, the collection efficiency will be assessed for BaP and 1-NP compounds by comparing breakthrough from the initial filter to the backup absorbent bed. Almost all of the BaP and 1-NP should be collected on the first filter element. Alternative collection media will be investigated if significant breakthrough of BaP and 1-NP is encountered. The gas phase compounds should exhibit minimal breakthrough to the second absorbent bed. The bed volume will be increased if significant breakthrough is observed.

Analyses will be performed to assure that degradation of the analytes does not occur on the filter/sorbent bed prior to desorption. Three sets of duplicate filters will be collected from the high concentration RASS exposure unit and the DEE exposure unit. One set of filters/sorbents will be immediately analyzed while the remaining duplicate sets will be sealed and stored at 5°C in the dark before desorption and analysis. The second set of duplicates will be analyzed after 3 weeks of storage and the third set after 6 weeks of storage.

BNW will attempt to make optimal use of the SRMs in assessing method validity, especially in assessing the recovery and extraction efficiency. The literature is replete with accounts concerning the difficulty of extracting PACs from particulate matter. Diesel particulate matter has been extensively characterized in SRM #1650 (May et al., 1992). Although this material was collected from heavy-duty diesel engines, it should serve as an excellent reference point for validating the procedures used to determine PAHs and nitro-PAHs.

Analytical Methodology. Samples will be collected using a dual element filter/absorbent. Chemical class fractionation will be performed as needed to reduce the presence of interfering substances. BNW will initially attempt to use some of recently published methods (Furton et al., 1993; Spitzer 1993), but more elaborate methods may be necessary (Lewtas et al., 1990).

As shown in Table IV-10, deuterated derivatives may be purchased for several PAHs. These compounds will be added to the extract as internal standards and analyzed by GC/MS using an HP-5971 MSD system operated in the selected ion monitoring mode with cold on-column injection onto a fused silica capillary column.

The nitro-PAHs are often analyzed using a method that can provide high selectivity for the nitro-PAHs. This approach is taken because of the low concentrations of nitro-PAHs in most samples and the concomitant need to defeat the presence of significant amounts of potentially interfering compounds. Negative-ion chemical ionization (CI) GC/MS has been widely accepted because of the general availability of the instrumentation and the high selectivity and sensitivity seen for nitro-PAHs (Schuetzle et al., 1982; White, 1985). Gas chromatography with a nitrogen-specific detector, high-resolution GC/MS, and tandem MS have also been used with good results (Paputa-Peck et al., 1983; Schuetzle et al., 1982; White, 1985).

BNW proposes the use of a TEA to analyze nitrosamines. This will also be available for use in the selective determination of nitro-PAHs. There are several accounts indicating that the TEA gives good selectivity and sensitivity for nitro-PAHs (Niles and Tan, 1989; White, 1985). Gas chromatography can be used for nitro-PAHs, but can be problematic due to degradation (generally reductions) in heated zones within the gas chromatograph and associated injection artifacts. Thus, BNW will initially attempt to separate the nitro-PAHs by HPLC/TEA.

(12) Aniline, 2-Aminonaphthalene, and 4-Aminobiphenyl. Sidestream smoke contains numerous aliphatic and aromatic amines and nitrogen-containing heterocylics. At least 30 aromatic aniline derivatives have been identified (IARC, 1985). The aromatic amines are a significant class of compounds, with 2-naphthylamine and 4-aminobiphenyl regarded as potent bladder carcinogens (Guerin et al.,

2029227813

"Use or disclosure of proposal data is subject to the restriction on the Title page of this Proposal."

Source: https://www.industrydocuments.ucsf.edu/docs/hpxl0000

1992). These compounds have been found in sidestream smoke at concentrations about 30 times those in mainstream smoke.

Aniline will be determined in this study as a characteristic marker of exposure to aromatic amines. However, BNW also proposes to determine 2-naphthylamine and 4-aminobiphenyl for several reasons. They are known carcinogenics and their nitro-analogs, 4-nitrobiphenyl and 2-nitronaphthalene are known to occur in diesel exhaust. Although BNW has been unable to find confirmation in the literature that biotransformation of the two nitro compounds to the corresponding amines occurs, this metabolic pathway is well known for various aromatic nitro-compounds.

The determination of 4-aminobiphenyl is of particular interest, since hemoglobin adducts of 4-aminobiphenyl have been used as a marker of exposure to tobacco smoke (Farmer, 1991) and BNW has proposed such an adduct determination as an optional study for both the DEE and RASS exposures. Measurement of 4-aminobiphenyl concentration in the exposure atmosphere is a logical complement to the adduct determination.

Analytical Methodology. The analytical methodology for determination of aromatic amines will be modeled after that described elsewhere in this proposal for determining nicotine and 3-ethenylpyridine. BNW will initially try the same extraction procedure with deuterated compounds added as internal standards, followed by GC/MS analysis. The XAD-4 sorbent tubes will be used to collect both gaseous and particle-bound amino analytes from the RASS exposure atmospheres.

As an alternative, it may be necessary to try some of the procedures described in the literature that use prefractionation (Grimer et al., 1987) and formation of pentafluoropropionamides (Patrainakos and Hoffmann, 1979). However, if plans to implement a tandem MS are realized, the use of reactant ion monitoring in conjunction with capillary column chromatography (GC/MS/MS), would very likely allow the elimination of interferences that could compromise GC/MS.

The analytical methodology will be validated by recovery studies and sample stability studies, as described previously for the determination of nicotine and 3-ethenylpyridine.

(13) Heavy Metals. A variety of metals or metal compounds are found in the particulate material from both RASS and DEE (IARC, 1985, 1989). Many of these metals, including arsenic, cadmium, cobalt, lead, chromium and nickel are associated with known adverse health effects, including cancer (IARC, 1985). Accordingly, BNW proposes that the chemical characterization of RASS and DEE exposure atmospheres include analysis of metals in particulate matter from exposure atmospheres during the subchronic and chronic studies.

Sampling. Duplicate filter samples will be collected from a nose port from each exposure unit over the duration of one 6-hour exposure day. Samples will be collected at ~0.5 L/minute on 25-mm Teflon-lamimated polypropylene filters with a 0.2-μm pore size, using a calibrated flow sampler. Several filter blanks will also be collected by placing filters in the sampling device and removing the filters without drawing any sample.

Analytical Methodology. After collection, filter samples will be placed in acid-digestion bombs with 3 ml of ultrapure, concentrated nitric acid and heated at 150°C for 3 hours. After cooling, an internal standard of yttrium will be added and the contents diluted to a constant volume with deionized water. Filter extracts will be analyzed for arsenic, mercury, lead, chromium, nickel, cadmium, iron, and zinc using either ICP-AES or ICP-MS, as required to obtain the necessary sensitivity for quantitative analysis. Based on the amount of each metal determined on each filter and the volume of test atmosphere drawn from the exposure unit, BNW will calculate the concentration of each metal (micrograms/cubic meter) in the RASS and DEE exposure atmospheres.

2029227814

"Use or disclosure of proposal data is subject to the restriction on the Title page of this Proposal."

Source: https://www.industrydocuments.ucsf.edu/docs/hpxl0000

(14) Sulfur Dioxide. Sulfur dioxide (SO_2), a colorless gas with an irritating and pungent odor, is a common atmospheric pollutant resulting from the combustion of sulfur-bearing coals and petroleum fuels. Sulfur dioxide is present in mainstream cigarette smoke (Guerin et. al., 1992) and in DEE (IARC, 1989). At concentrations of 5 ppm or more, SO_2 has been reported to produce increased pulmonary airflow resistance in laboratory animals and humans (Greenwald, 1954).

Analytical Methodology. BNW proposes the use of a Horiba Model 350-E SO_2 monitor. This instrument measures UV fluorescence and requires none of the reagent gases or fluids associated with SO_2 analyzers based on flame photometric or coulometric detection principles. This instrument exceeds all performance specifications of the U.S. EPA and the European Environmental Testing Agency.

The lower limit of detection of the Horiba Model 350-E is 0.001 ppm SO_2. The instrument is very highly specific for SO_2; the only reported interference is water (~0.005 ppm at 100% RH). BNW will maintain the exposure atmosphere at 60 ± 10% RH, so the presence of water vapor in the system will not cause significant interference. The working range of the Horiba Model 350-E is 0 to 1.0 ppm, which BNW anticipates will be adequate.

BNW proposes to calibrate the Model 350-E SO_2 monitor on a monthly basis. Gas mixtures will be generated over the range of concentrations encountered in the test atmospheres by blending a stock standard SO_2 gas mixture with pure air using a dynamic gas calibrator. Alternatively, a certified standard SO_2 permeation tube may be used with a dynamic calibrator in which the gas stream is mixed with a metered flow of purified air to produce gas standards over the concentration range of interest. Gas standards in pressurized cylinders cannot be reliably prepared and maintained at low concentrations of SO_2).

(15) Total Hydrocarbons and Methane. Volatile organic compounds are important constituents of indoor air because they are ubiquitous and because several (e.g., formaldehyde and benzene) are suspected human carcinogens. Research to date clearly shows that cigarette smoking contributes to the volatile organic chemical burden of indoor air (Guerin et. al., 1992). Gas-phase emissions from diesel engines include C_1-C_{18} hydrocarbons, two- to four-ring PAHs, and nitrated and oxygenated derivatives of C_1-C_{12} hydrocarbons and two- to three-ring PAHs (IARC, 1989). During exposures at BNW, the atmosphere will be carefully regulated so a precise estimate of the amount of total hydrocarbons in the exposure atmospheres of DEE and RASS can be made.

Analytical Methodology. BNW proposes the use of a Horiba Model APHA 350-E ambient hydrocarbon monitor. The Model 350-E is designed for reliable, continuous, unattended measurements of total hydrocarbon, methane, and nonmethane hydrocarbon analysis, or any combination thereof. The instrument uses a flame ionization detector in combination with a catalytic hydrocarbon cutter.

The lower detectable limit of the Horiba Model 350-E is 0.02 ppm carbon with the electronic noise within 0.01 ppm carbon. The flame ionization detector is well suited for the determination of hydrocarbons and the only reported interference is ~0.2 ppm carbon by 100% RH water vapor. BNW will maintain the exposure atmosphere at 60 ± 10% RH, so the presence of water vapor in the system will not cause significant interference. The working range of the Horiba Model 350-E is 0 to 100 ppm carbon, which BNW anticipates will be adequate.

The Model 350-E ambient hydrocarbon monitor will be calibrated on a monthly basis using propane as the calibration gas. The instrument calibration will be performed using several certified standard gases encompassing the expected concentration range. A certified on-line standard of propane in nitrogen will be used to determine drift of the Model 350-E detector. This standard will be sampled before beginning a series of measurements and routinely during the measurements to determine detector drift within a typical exposure day.

2022921815

"Use or disclosure of proposal data is subject to the restriction on the Title page of this Proposal."

Source: https://www.industrydocuments.ucsf.edu/docs/hpxl0000

b. Aerosol

(1) Tapered Element Oscillating Microbalance (TEOM) Mass Monitor. On-line monitoring of the mass concentration of RASS and DEE in the exposure units will be accomplished by a TEOM monitor (Model 1400).

The TEOM is a gravimetric instrument capable of measuring the concentration of particles in the range of 50 $\mu g/m^3$ to several grams/cubic meter. The system draws sample air through a filter at a constant, calibrated rate. A Teflon-coated borosilicate glass filter is mounted on top of an oscillating tapered sampling tube. An electronic feedback circuit maintains the oscillation of the tube at its natural frequency. This frequency is directly dependent on the mass collected on the filter. By accurately measuring the oscillation frequency, the mass can be determined. The concentration is then calculated from the measured mass collected on the filter and the measured sample volume through the filter.

TEOM readings will be primarily used to control RASS and DEE TPM concentrations and to report temporal concentration stability during the 6-hour exposure period. The TPM determined from Cambridge-filter samples will also be reported as the average 6-hour exposure concentration.

Because the mass concentration of the DEE is continually changing as the engine is cycled, a single TEOM will be required to monitor the DEE exposure unit pair. This TEOM will report the average DEE mass concentration during the 23-minute engine cycle. During the subchronic study, the DEE TEOM will be valved to alternately monitor the 10- and the 3-mg/m^3 exposure units for individual 23-minute cycles. A second TEOM will be multiplexed to monitor the mass concentration of RASS in each of the RASS exposure unit pairs. This TEOM will also monitor the mass concentration in the filtered-air exposure unit pair. The output of the TEOM monitors will be interfaced to the main data acquisition and control system by a dedicated computer running proprietary software developed by BNW.

The TEOM system will be calibrated by attaching a filter of known mass on the tapered element. The corresponding frequency will be measured and the "spring constant" of the system will be calculated. From this constant, the mass can be calculated at other frequencies of oscillation. This calibration will be checked against separate gravimetric filter samples taken from an exposure port at the same time the TEOM sample is taken.

(2) Realtime Aerosol Monitor (RAM). On-line monitoring of the RASS smoke as it enters the distribution line from the aging room will be accomplished with a dedicated RAM. The RAM readings will be used only to monitor and control the stability of the TPM concentration of RASS in the aging room.

The RAM uses a pulsed light-emitting diode in combination with a silicon detector to sense light scattered over a forward angle of 45 to 95° by the particles traversing the sensing volume. The instrument will respond to particles in the 0.1- to 20-μm diameter size range. Although the geometric diameter of cigarette smoke approaches the minimum of this range, the concentration in the aging room will be high enough to assure a RAM response sufficient to determine the stability of the concentration for control purposes.

The output of the RAM will be automatically read and recorded by the data acquisition and control system. As each voltage is read, it will be compared to limit values. If limit values are exceeded, the system will sound an alarm to indicate that the generation system must be adjusted.

An approximate calibration of the RAM will be performed by correlating instrument response (voltage) with TPM values from weekly filter samples collected from the aging room at the point RASS enters the distribution line.

2029227816

"Use or disclosure of proposal data is subject to the restriction on the Title page of this Proposal."

Source: https://www.industrydocuments.ucsf.edu/docs/hpxl0000

(3) Total Particulate Matter (TPM) Filters. Aerosol mass measurements of both RASS and DEE will be performed by taking duplicate Cambridge-filter samples from two exposure ports from each exposure unit. The filters will be analyzed gravimetrically. The filter samples will be taken during the entire 6-hour exposure period each day. The TPM determined from these samples will be the reported average exposure concentration for the exposure period. The UV-PM method may also be used to determine TPM for samples with insufficient TPM for gravimetric determination.

(4) Aerosol Particle Size Distribution. Ingebrethsen and Sears (1985) evaluated the particle size distribution of ETS smoke at different mass concentrations (Table IV-11).

TABLE IV-11. Aerosol Properties of Environmental Tobacco Smoke[a]

Particle Mass Concentration ($\mu g/m^3$)	1.4	28	226
Average diameter (μm)	0.098	0.123	0.141
Mass median diameter (μm)	0.185	0.198	0.21
Particle number <0.1 μm (%)	73	54	39
Particle mass <0.1 μm (%)	17	8.5	5.5

[a]Dilute sidestream smoke aged for 1 hour in an 18-m^3 chamber

These results suggest that the particle size of ETS increases with increasing mass concentration. The mass concentration of the ETS (RASS) smoke to be generated in our experiments will initially be ~20 $\mu g/L$ in the aging room. It is expected that the particle size will be somewhat larger than above, but probably less than 1 μm in average diameter.

Particle size distribution of the RASS aerosol will be determined in the aging room and in the exposure units before beginning the study. In the prestart phase, applicability of various techniques will be evaluated, including:

- An optical particle counter (Model HSLAS-065, Particle Measuring Systems Inc.; Boulder, CO)
- An electrical mobility analyzer with a condensation nucleus counter (Model DMPS; TSI, Inc.; St. Paul, MN)
- A Mercer-style cascade impactor (In-Tox Products, Albuquerque, NM).

The Model HSLAS-065 is a highly sensitive laser aerosol spectrometer that relates the light scattered by a single particle to its size. It operates within a size range of 0.065 to 1.0 μm in diameter.

Electrical mobility analyzers create a known charge distribution in an aerosol. By measuring the electrical mobility of particles in a well-defined electrical field, the particle size distribution can be calculated. The size range of the Model DMPS is 0.02 to 1.0 μm in diameter, with decreasing efficiency as the particle size approaches 1.0 μm.

2029227817

"Use or disclosure of proposal data is subject to the restriction on the Title page of this Proposal."

Source: https://www.industrydocuments.ucsf.edu/docs/hpxl0000